TABLE A		
NO.	DESCRIPTION	STRUCTURE AND MATEERIAL
1	ANTENNA SUBSTRATE	DIELECTRIC CERAMIC
2	PIN	COPPER AND TIN PLATED
3	PATCN	Ag PLATED
4	ADHESIVE TYPE	NITTO 5000NS

REV	DATE	DESCRIPTION
A	2016/08/14	NEW RELEASE
B	2019/07/01	UPDATE DRAWING

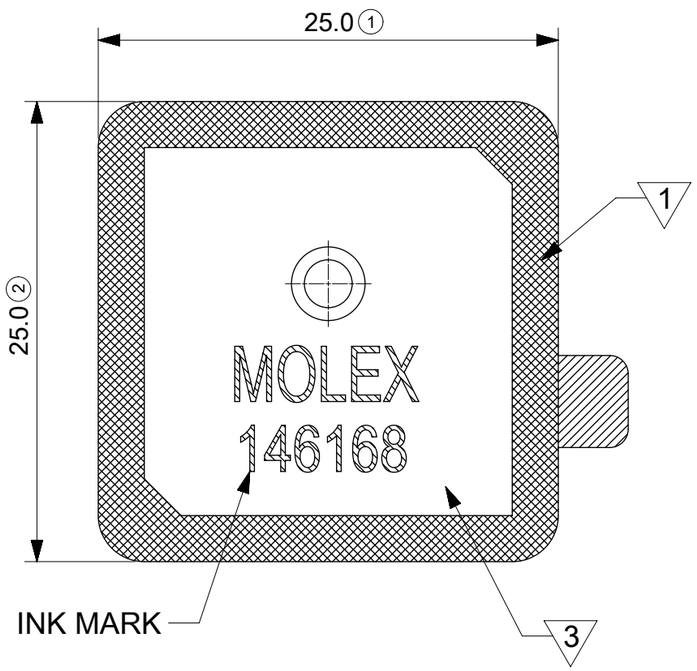

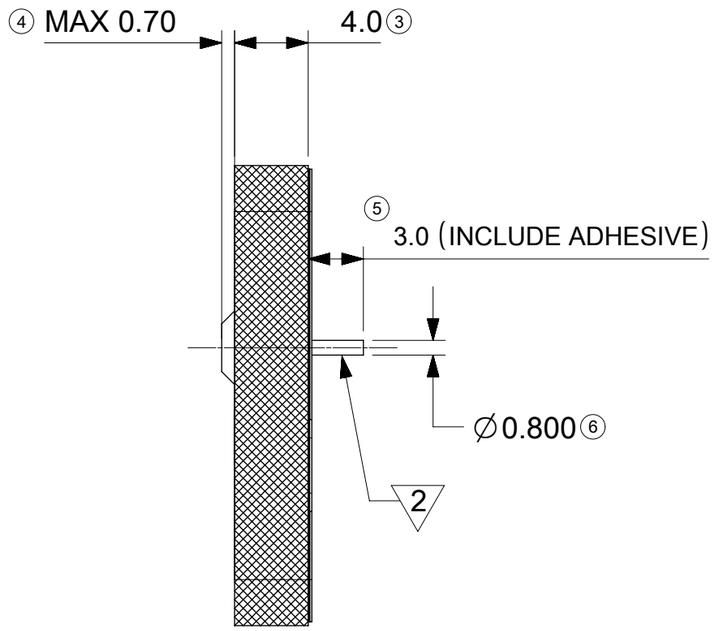

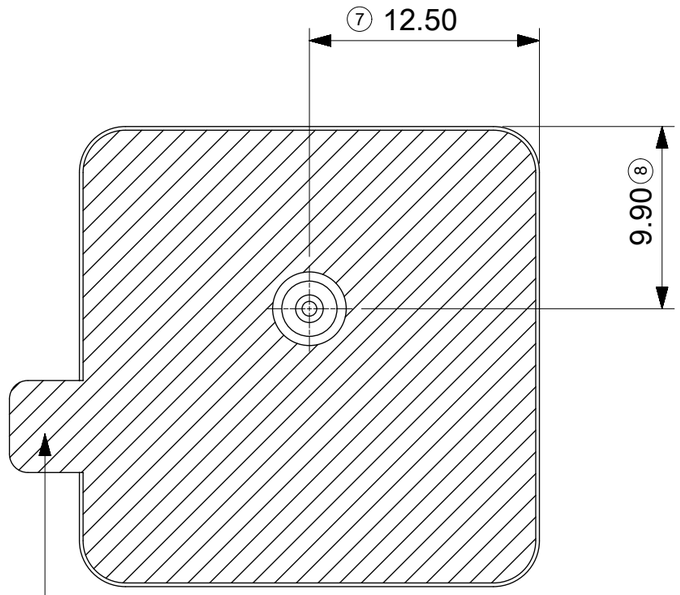

RELEASE PAPER(ADHESIVE) 4

NOTES:
1. MATERIAL: CERAMIC.
2. GENERAL COSMETIC APPEARANCE AS DEFINED BY MOLEX COSMETIC SPECIFICATION.
3. STRUCTURE AND MATERIAL REFERENCE TABLE A
4. NITTO 5000NS THICKNESS:0.16mm.

THIS DRAWING CONTAINS INFORMATION THAT IS PROPRIETARY TO MOLEX ELECTRONIC TECHNOLOGIES, LLC AND SHOULD NOT BE USED WITHOUT WRITTEN PERMISSION

SYMBOLS	
EA	= 0
EC	= 0
EF	= 0
S	= 0
▼	= 0
C	= 0
☒	= 0
■	= 0
V	= 0

DIMENSION UNITS	SCALE
mm	3:1
GENERAL TOLERANCES (UNLESS SPECIFIED)	
ANGULAR TOL	± °
4 PLACES	±
3 PLACES	± 0.2
2 PLACES	± 0.25
1 PLACE	± 0.4
0 PLACES	±
DRAFT WHERE APPLICABLE MUST REMAIN WITHIN DIMENSIONS	

CURRENT REV DESC:

EC NO: 619936
DRWN: KCHENG06 2017/10/30
CHK'D:
APPR:

INITIAL REVISION:
DRWN: TZHOU07 2016/08/14
APPR: CYU08 2016/11/07

THIRD ANGLE PROJECTION | DRAWING: A3-SIZE | SERIES: 146168

molex

GPS RHCP PATCH CERAMIC ANTENNA

PRODUCT CUSTOMER DRAWING

DOCUMENT NUMBER	DOC TYPE	DOC PART	REVISION
1461680001	PSD	SD	B

MATERIAL NUMBER	CUSTOMER	SHEET NUMBER
1461680001	GENERAL MARKET	1 OF 1

DOCUMENT STATUS	RQ	RELEASE DATE	

FORMAT: master Sheet-A3
REVISION: H
DATE: 2018/01/15