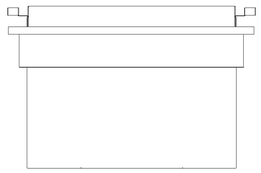

TOP VIEW

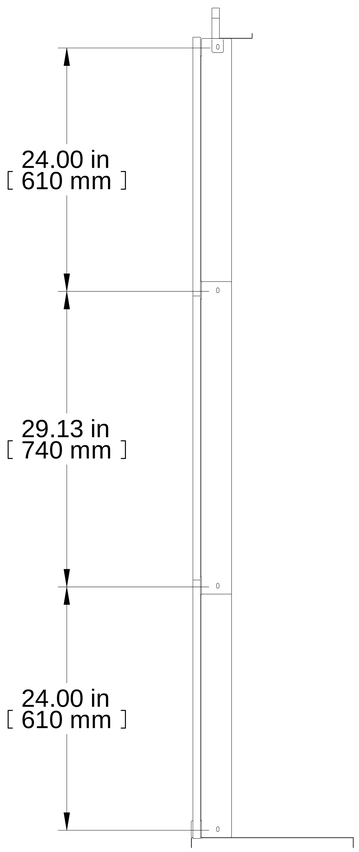

L.S. VIEW

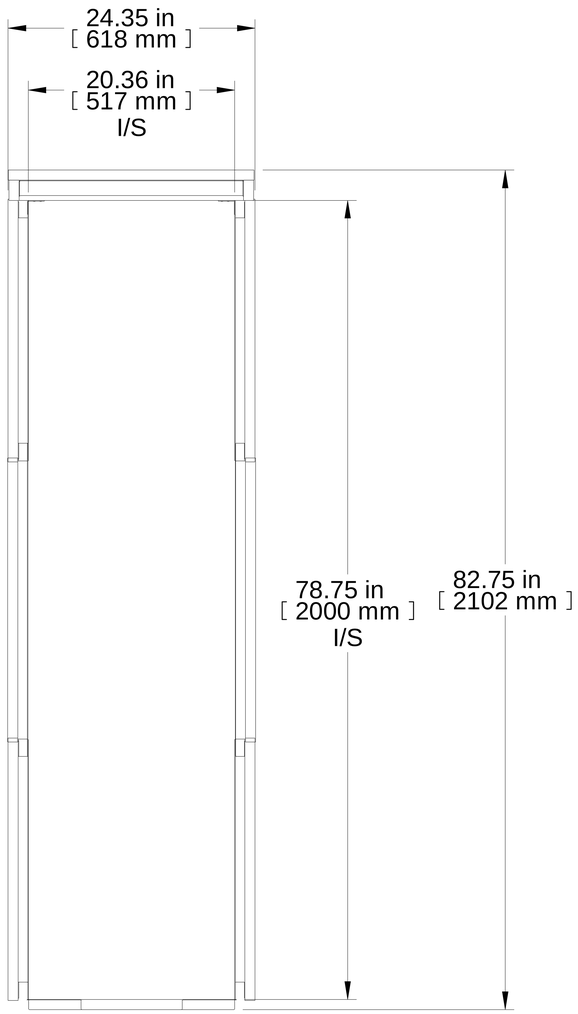

FRONT VIEW

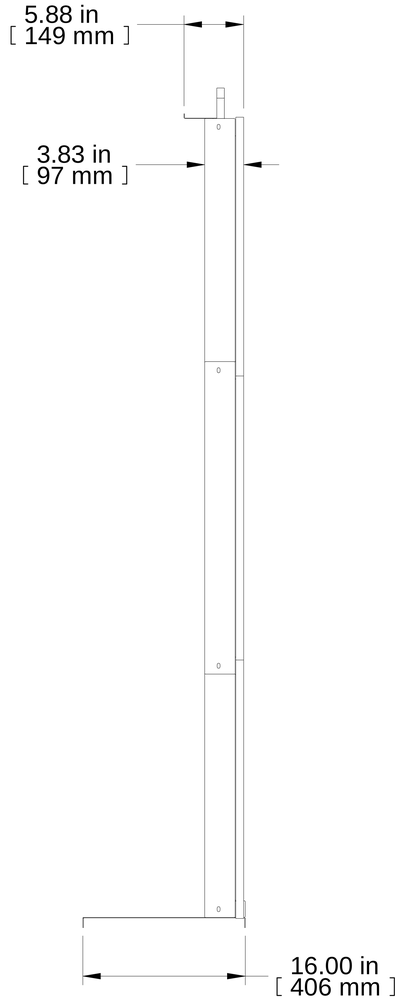

R.S. VIEW

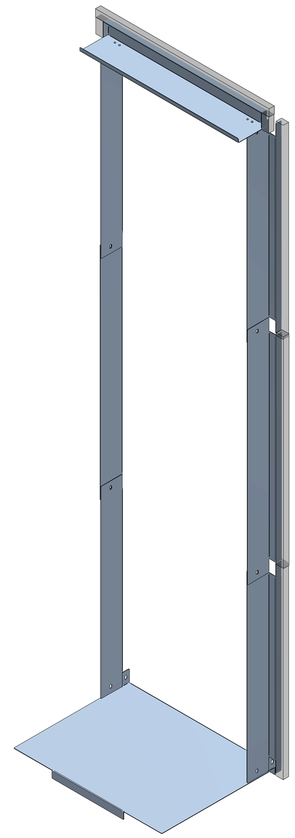

ISOMETRIC

BOTTOM VIEW

Item Number	Title	Quantity
1	AIR DAM BOTTOM PANEL	1
2	AIR DAM TOP PLATE ASS'Y (24W)	1
3	AIR DAM VERT MIDDLE BRKT ASS'Y (45U)	2
4	AIR DAM VERT TOP/BTTM BRKT ASS'Y	4

PART NUMBERS

H1AD2445BK	PAINTED BLACK TEXTURED

NOTES

AIR DAM KIT FOR H1 CABINET 24W 45U
MOUNTING HARDWARE INCLUDED
SEE HAMMOND WEBSITE FOR MORE ACCESSORIES

Français

Pour tous les détails sur nos produits,
svp veuillez consulter notre site www.hammondmfg.com

Data subject to change without notice. Isometric drawing not to scale.
Les données sont sujettes à changement sans préavis.

RoHS

HAMMOND MANUFACTURING®

www.hammondmfg.com

PART NO. **H1AD2445BK**