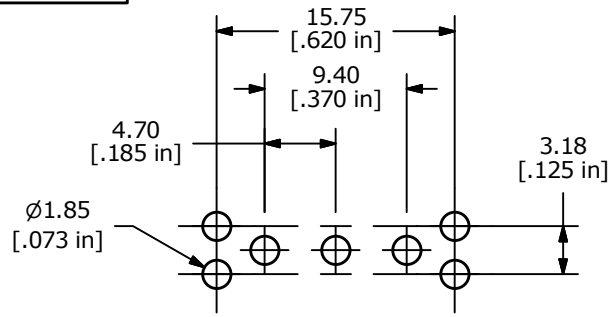

RECOMMENDED P.C. MOUNTING

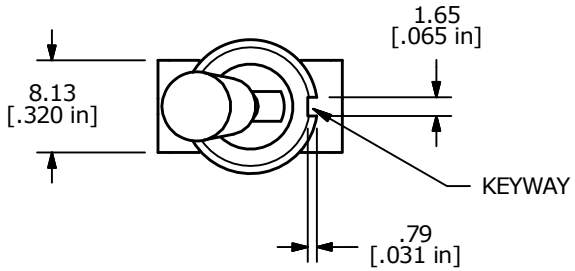

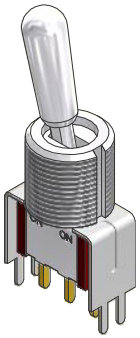

▲ SWITCH FUNCTION		
POS. 1	POS. 2	POS. 3
ON	NONE	ON
2-3	N/A	2-1

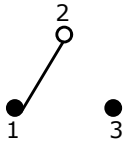

CIRCUIT: SPDT

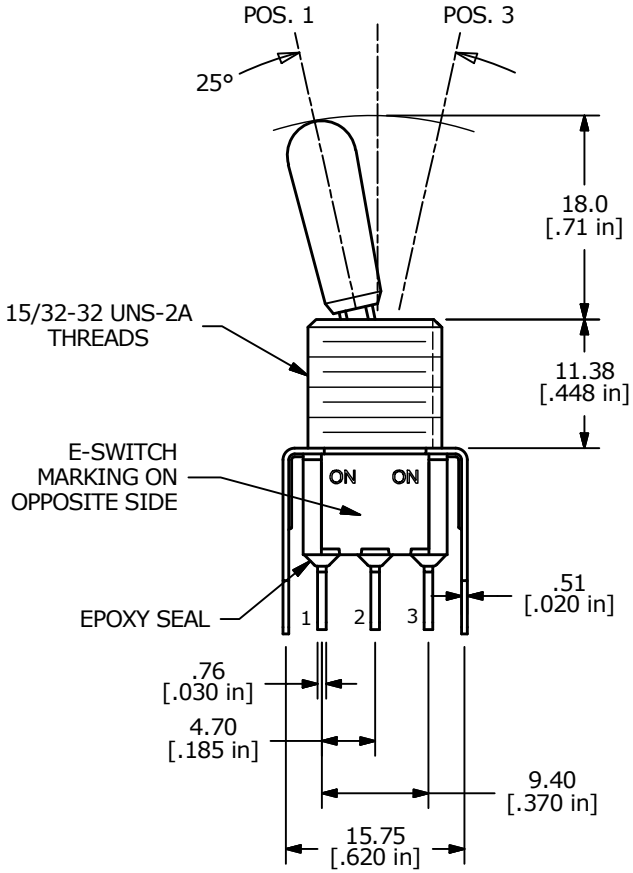

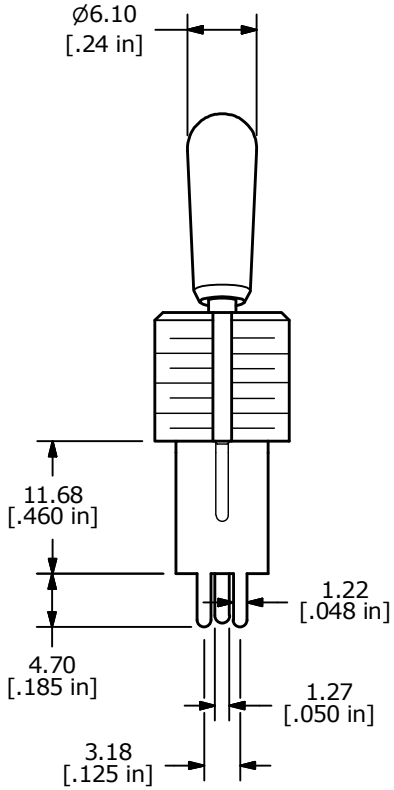

NOTE:
1. ALL DIMENSIONS IN MM [INCH]
2. GENERAL TOLERANCE: X.X = ±0.4
   X.XX = ±0.25
3. TERMINAL NUMBERS FOR REF ONLY
▲ 4. CONTACT MATERIAL: GOLD
5. RATING: 0.4 (VA) Max. @ 20V (AC or DC)
6. ELECTRIC LIFE: 40,000 MAKE-AND-BREAK CYCLES AT FULL LOAD.
7. INSULATION RESISTANCE: 1,000 MEGA-OHM MIN.
8. DIELECTRIC STRENGTH: 1,000 V RMS @ SEA LEVEL
9. OPERATING TEMP.: -30°C to 85°C
10. ▲ DENOTES CRITICAL PARAMETER.
11. 2011/65/EU (ROHS) COMPLIANT
12. HARDWARE TO BE SHIPPED BULK
    T100004 - HEXNUT - QTY 2
    T100012 - LOCKWASHER - QTY 1
    T100003 - LOCKRING - QTY 1

REV	PCR NO	DESCRIPTION	DATE	BY
B	23234	Drawing update	2/26/18	MW
A	17982	RELEASED FOR PRODUCTION	2/22/08	BLR

THE INFORMATION CONTAINED IN THIS DOCUMENT IS PROPRIETARY TO E-SWITCH AND IS NOT TO BE COPIED OR TRANSFERRED

E-SWITCH®

TITLE 100SP1T8B13VS2REH

SCALE	DATE	DR	DWG	REV
2:1	2/22/2008	BLR	ST113057	B