P/N: 098982 5055 CODING: GREEN

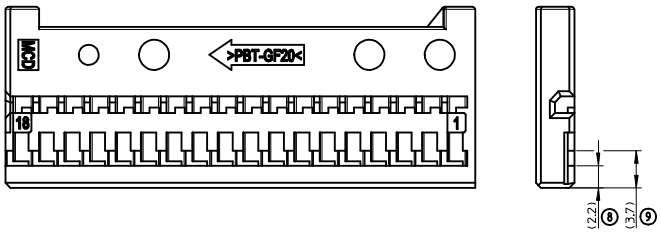

P/N: 098982 5056 CODING: BLUE

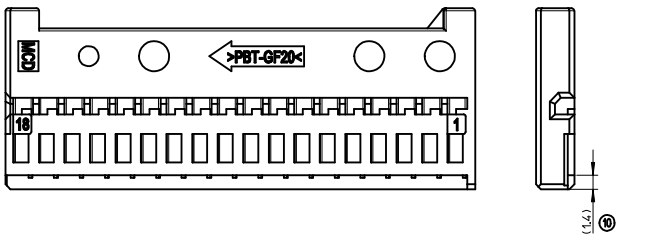

CODING

REPRESENTED ITEM : GREEN CODING

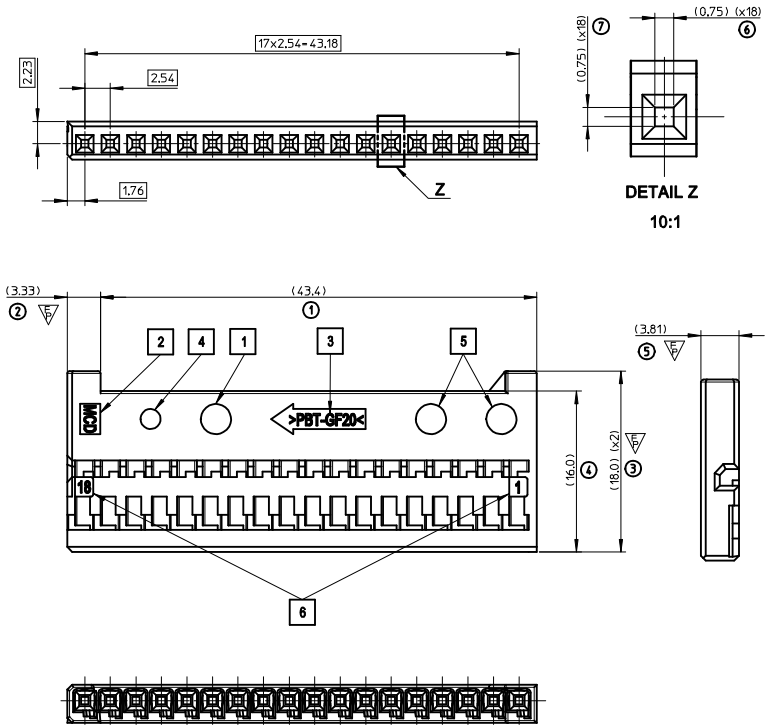

MODIFICATIONS

REV.	DESCRIPTIONS	NAME	DATE
A	-DOCUMENT FIRST RELEASE	GD	2017/02/10
A1	-PART NUMBER CORRECTED FOR CODING CHART (WERE 98982 2055 & 98982 2056).	GD	2017/03/24

ISO VIEW

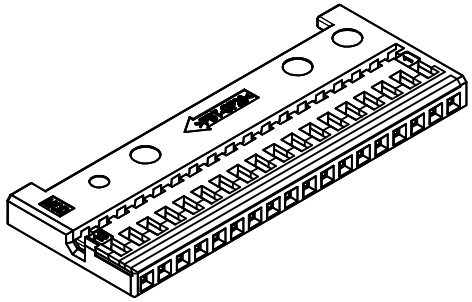

NOTES:

1 - PRODUCT WEIGHT : 1,9 GRAM
2 - PACKAGING SPECIFICATION : PK-98982-002
3 - APPLICATION SPECIFICATION : TBD
4 - PRODUCT SPECIFICATION : TBD
5 - TERMINALS TO BE USED : MQS (by TE)
6 - MATES IN FEMALE CONNECTOR:
SEE COMPONENT COMPATIBILITY TABLE

COMPONENT COMPATIBILITY TABLE

DESCRIPTION →			54CKT FEMALE CONNECTOR		
	PART NUMBER →		98982 5011	98982 5012	98982 5019
		COLOR →	BLACK	GREY	PURPLE (UNIVERSAL)
MQS RCPT MODULE 18CKT	098982 5055	GREEN	X		X
	098982 5056	BLUE		X	X
>PBT-GF20<					
MATERIAL					

MARKINGS:

1 - MOLD REVISION LEVEL
2 - SUPPLIER PLANT PROD.
3 - MATERIAL
4 - MOLD CAVITY NUMBER
5 - DATUM YEAR AND MONTH
6 - CAVITIES IDENTIFICATION

REVISED
EC NO: G2017-0085
DRWN:GDESBRUERES 2017/03/24
CHKD: 2017/04/05
APPR:SLAFAURE
DESCRIPTION
REV
A1

QUALITY SYMBOLS
=0
=0
=3

GENERAL TOLERANCES (UNLESS SPECIFIED)

	mm	INCH
4 PLACES	± ---	± ---
3 PLACES	± ---	± ---
2 PLACES	± ---	± ---
1 PLACE	± ---	± ---
0 PLACE	± ---	± ---
ANGULAR	±---°	

DRAFT WHERE APPLICABLE MUST REMAIN WITHIN DIMENSIONS

DIMENSION STYLE: MM ONLY
SCALE: 4:1
DESIGN UNITS: METRIC
FIRST ANGLE PROJECTION

		DATE
DRAWN BY	GDESBRUERES	2017/02/10
CHECKED BY	CBOUCHAN	2017/02/10
APPROVED BY	SLAFAURE	2017/03/14

TITLE: 18CKT MQS RCPT MODULE

molex

MATERIAL NO.: SEE CHART
DOCUMENT NO.: SD-98982-003
SHEET NO.: 1 OF 1
SIZE: A1

THIS DRAWING CONTAINS INFORMATION THAT IS PROPRIETARY TO MOLEX INCORPORATED AND SHOULD NOT BE USED WITHOUT WRITTEN PERMISSION