THIS DRAWING IS UNPUBLISHED. RELEASED FOR PUBLICATION -,- .
© COPYRIGHT - By - ALL RIGHTS RESERVED.

LOC	DIST
AD	25

REVISIONS

P	LTR	DESCRIPTION	DATE	DWN	APVD
	H	REVISED PER ECO-13-019311	13DEC2013	KH	RP

1. HOUSING MATERIAL: GLASS-FILLED POLYESTER. COLOR: GRAY.
2. CONTACT MATERIAL: PHOSPHOR BRONZE.
3. PART NUMBER AND DATE CODE HOT STAMPED IN THIS APPROXIMATE AREA ON EITHER SIDE OF CONNECTOR.
4. ACTION PIN POSTS REQUIRE 1.57[.062] MINIMUM THICK PC BOARD. RECOMMENDED PC BOARD DRILLED HOLES ARE 1.15±0.025[.0453±.0010] DIAMETER WITH 0.02-0.08[.001-.003] COPPER AND 0.008[.0003] MINIMUM TIN-LEAD PLATING. FINISHED HOLE AFTER PLATING IS 1.02±0.08[.040±.002] DIAMETER.
5. CONTACT FINISH: DIN 41612 CLASS 2 IN CONTACT AREA. TIN-LEAD PLATE ON POSTS.
6. TAIL LENGTH AFTER SEATING IN PC BOARD.
7. CONTACT POINT AFTER SEATED IN PC BOARD.
8. HOT STAMPING ON THIS SIDE.
9. CONTACT FINISH: DIN 41612 CLASS 2 IN CONTACT AREA AND LAST 5.08[.200] OF POST.
10. CONTACT FINISH: 0.00076[.000030] GOLD IN CONTACT AREA AND LAST 5.08[.200] OF POST. 0.00127[.000050] NICKEL UNDERPLATE ALL OVER.

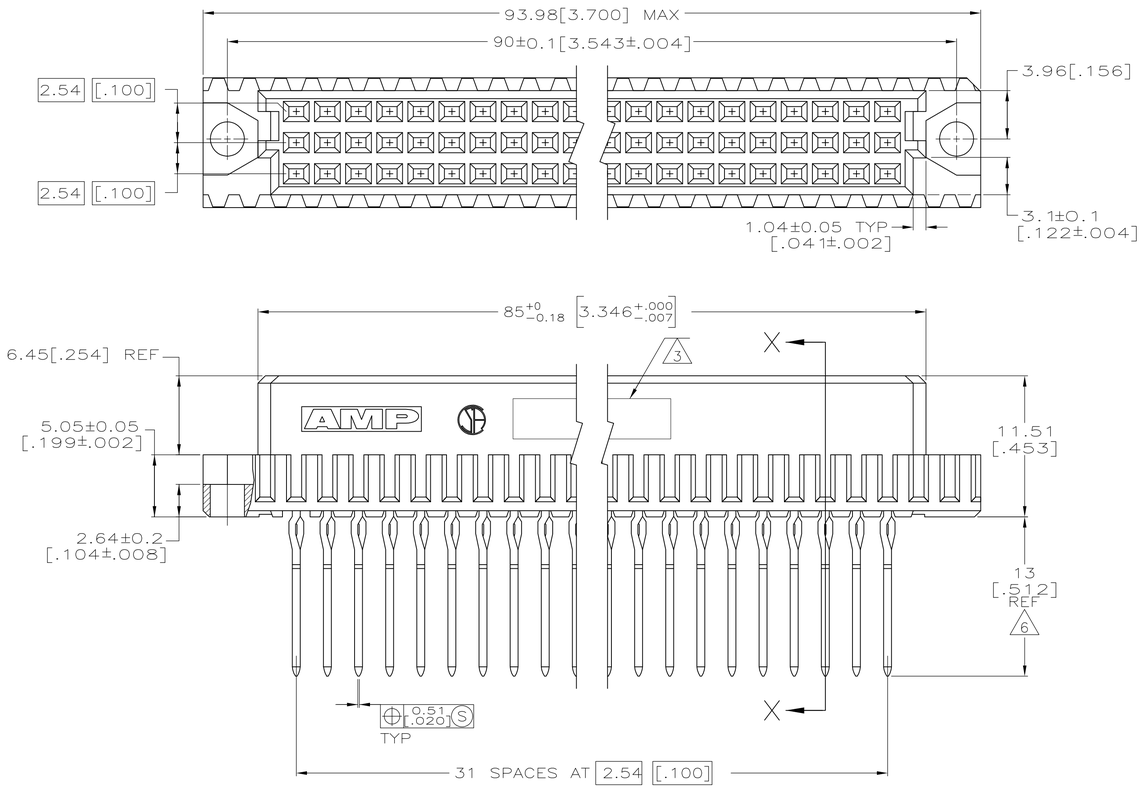

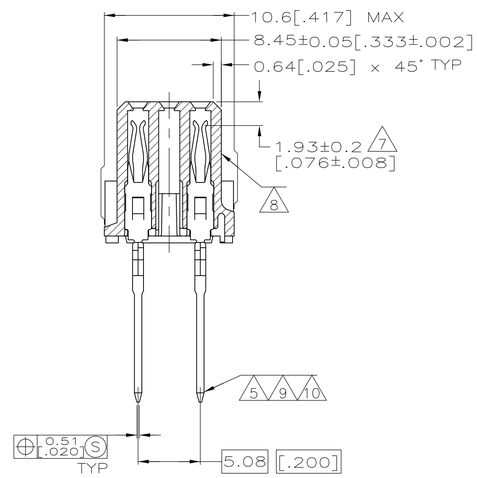

SECTION X-X

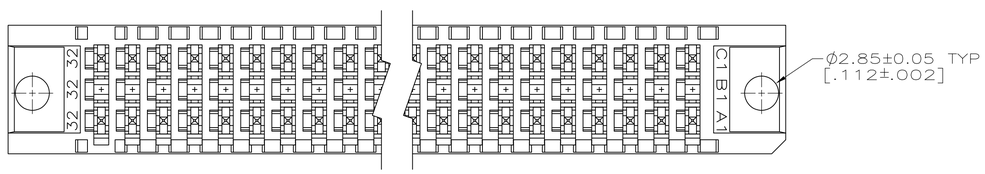

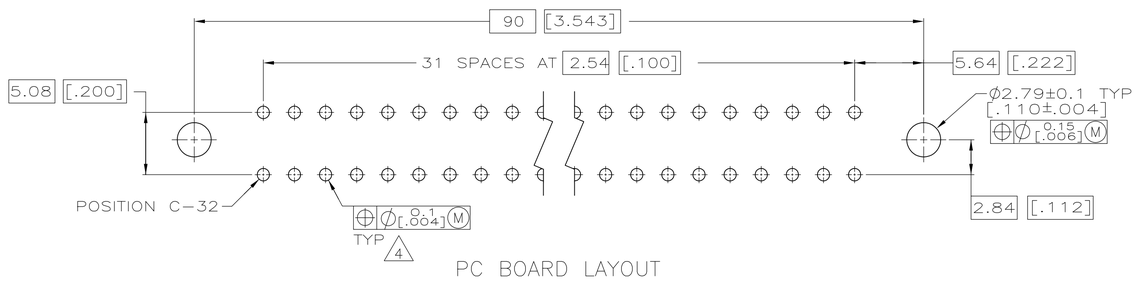

PC BOARD LAYOUT

	9	1-32	X	–	X	64	1-148167-5
OBSOLETE	10	1-32	X	–	X	64	1-148167-4
OBSOLETE	5	1-32	X	–	X	64	148167-5
	NOTES	POSITIONS LOADED	ROWS LOADED C	B	A	NO. OF LOADED POSITION	PART NUMBER

THIS DRAWING IS A CONTROLLED DOCUMENT.

DIMENSIONS: mm [INCHES]

TOLERANCES UNLESS OTHERWISE SPECIFIED:
0 PLC ± –
1 PLC ± –
2 PLC ± 0.13[.005]
3 PLC ± –
4 PLC ± –
ANGLES ± –

MATERIAL 1 2
FINISH 5 9 10

DWN L. BRINER 6/20/95
CHK C. RICHARD 6/20/95
APVD C. RICHARD 6/20/95
PRODUCT SPEC —
APPLICATION SPEC —
WEIGHT —

TE Connectivity

NAME RECEPTACLE ASSEMBLY, EUROCARD, TYPE C –

SIZE	CAGE CODE	DRAWING NO	RESTRICTED TO
A1	00779	C-148167	—

CUSTOMER DRAWING SCALE 4:1 SHEET 1 OF 1 REV H

4805 (3/11)