DRAWING MADE IN THIRD ANGLE PROJECTION

PART NUMBER	REV	FIRST USED
565724-1	L	1-471273-3

△1 RECOMMENDED SPARE PARTS.

△2 CRIMP HEIGHT FOR INITIAL SET-UP ONLY.

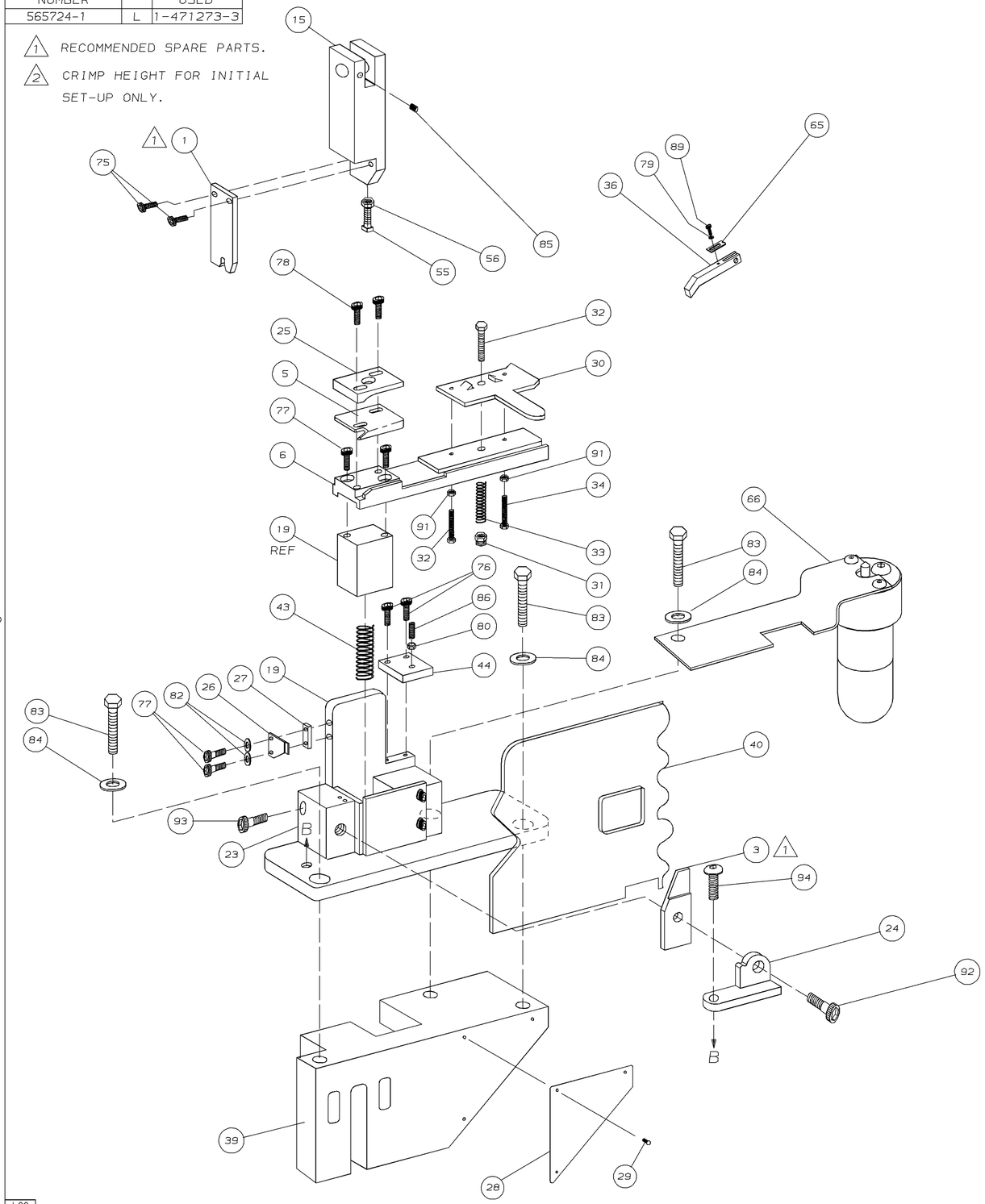

TERMINAL NAME: LENGTHWISE THRU SPLICE		
		60997
TERM APPL SPEC		–

CRIMPING DATA	
CRIMP HEIGHT	WIRE SIZE
.139 △2	2(12)
–	–
–	–
–	–

CRIMP	SIZE	TYPE	RANGE
WIRE	.180	F	12000-18000 CMA
INSUL	–	–	–

FEED	APPL INST	SET UP GAGE	LAYOUT
.300	–	–	–

WIRE STRIP LENGTH –

-1	U/M	DWG SIZE	PART NO	DESCRIPTION	ITEM NO
–	–	–	–	–	129
–	–	–	–	–	128
–	–	–	–	–	127
–	–	–	–	–	126
–	–	–	–	–	125
–	–	–	–	–	124
–	–	–	–	–	123
–	–	–	–	–	122
–	–	–	–	–	121
–	–	–	–	–	120
–	–	–	–	–	119
–	–	–	–	–	118
–	–	–	–	–	117
–	–	–	–	–	116
–	–	–	–	–	115
–	–	–	–	–	114
–	–	–	–	–	113
–	–	–	–	–	112
–	–	–	–	–	111
–	–	–	–	–	110
–	–	–	–	–	109
–	–	–	–	–	108
–	–	–	–	–	107
–	–	–	–	–	106
–	–	–	–	–	105
–	–	–	–	–	104
–	–	–	–	–	103
–	–	–	–	–	102
–	–	–	–	–	101
–	–	–	–	–	100
–	–	–	–	–	99
–	–	–	–	–	98
–	–	–	–	–	97
–	–	–	–	–	96
–	–	–	–	–	95
1	–	A	4-21002-1	SCR, BSHC 5/16-18 x .75	94
1	–	A	3-21001-4	SCR, SHC, 3/8-16 X .88	93
1	–	A	21001-5	SCR, SHC, 1/4-20 X .88	92
2	–	A	21018-7	NUT, HEX 10-32	91
–	–	–	–	–	90
1	–	A	2-21000-5	SCR, SHC, 8-32 X .25	89
–	–	–	–	–	88
–	–	–	–	–	87
1	–	A	5-21006-5	SCR, SOC SET, 10-32 X .75	86
1	–	A	2-21549-3	SCR, SOC SET, 1/4-20 X .25	85
3	–	A	371178	WASHER, FLAT, 3/8	84
3	–	A	3-21015-2	SCR, HEX HD, 3/8-16 X 1.25	83
2	–	A	21024-5	WASHER, LOCK #10	82
–	–	–	–	–	81
1	–	A	21018-7	NUT, HEX 10-32	80
1	–	A	21055-6	WASHER, FLAT, #8	79
2	–	A	3-21000-7	SCR, SHC 10-32 X .75	78
4	–	A	3-21000-6	SCR, SHC, 10-32 X .62	77
2	–	A	3-21000-4	SCR, SHC, 10-32 X .38	76
2	–	A	21001-3	SCR, SHC, 1/4-20 X .62	75
–	–	–	–	–	74

REVISION OF EACH ASSY NO (WHEN BLANK, USE DWG REVISION)

PARTS LIST

-1	U/M	DWG SIZE	PART NO	DESCRIPTION	ITEM NO
–	–	–	–	–	73
–	–	–	–	–	72
–	–	–	–	–	71
–	–	–	–	–	70
					69
–	–	–	–	–	68
					67
1	–	A	465184-2	LUBRICATOR ASSY	66
1	–	A	374999	TENSION ADJ PLATE	65
–	–	–	–	–	64
–	–	–	–	–	63
–	–	–	–	–	62
–	–	–	–	–	61
–	–	–	–	–	60
–	–	–	–	–	59
–	–	–	–	–	58
–	–	–	–	–	57
1	–	–	22202-1	NUT, HEX JAM, 1/4-20	56
1	–	–	21077-7	SCR, SQ HD SET, 1/4-20 X 1.50	55
–	–	–	–	–	54
–	–	–	–	–	53
–	–	–	–	–	52
–	–	–	–	–	51
–	–	–	–	–	50
–	–	–	–	–	49
–	–	–	–	–	48
–	–	–	–	–	47
–	–	–	–	–	46
–	–	–	–	–	45
1	–	–	372998	RETAINER,FEED PLATE	44
1	–	A	2-24017-7	SPRING SLIDE	43
–	–	–	–	–	42
–	–	–	–	–	41
1	–	–	460582-1	GUARD	40
1	–	C	570238	BASE CASTING	39
–	–	–	–	–	38
–	–	–	–	–	37
1	–	–	811432-1	FEED FINGER	36
–	–	–	–	–	35
2	–	A	372997	ADJ. SCREW,STOCK DRAG	34
1	–	A	23846-7	SPRING,STOCK DRAG	33
1	–	–	21015-8	STUD,STOCK DRAG	32
1	–	A	21022-4	NUT,STOCK DRAG HANDLE	31
1	–	–	372990	STOCK DRAG	30
3	–	A	21017-6	SCR,DRIVE 4-40X.25	29
1	–	A	452373-1	PLATE, IDENTIFICATION	28
1	–	–	375569	SPACER,CLEANER	27
1	–	–	810995-2	STRIPPER	26
1	–	–	376945	WIRE GUIDE	25
1	–	–	378975	AUX. ANVIL HOLDER	24
1	–	–	374348	ANVIL HOLDER	23
–	–	–	–	–	22
–	–	–	–	–	21
–	–	–	–	–	20
1	–	C	473933	APPLICATOR MOUNT ASSY	19
–	–	–	–	–	18
–	–	–	–	–	17
–	–	–	–	–	16
1	–	B	471057	RAM	15
–	–	–	–	–	14
–	–	–	–	–	13
–	–	–	–	–	12
–	–	–	–	–	11
–	–	–	–	–	10
–	–	–	–	–	9
–	–	–	–	–	8
–	–	–	–	–	7
1	–	A	1-471917-0	PLATE,FEED	6
△1 1	–	B	471972-8	BLADE,SHEAR	5
–	–	–	–	–	4
△1 1	–	B	373014	ANVIL	3
–	–	–	–	–	2
△1 1	–	C	1-453925-2	CRIMPER,WIRE	1

REVISION OF EACH ASSY NO (WHEN BLANK, USE DWG REVISION)

PARTS LIST

QTY REQD PER ASSY

P	F	LTR	REVISION RECORD	APP	DATE
		L	0150-6026-95	CE	3-95

DIMENSIONS IN INCHES.
DO NOT SCALE PRINT.
TOLERANCES UNLESS OTHERWISE SPECIFIED,
2 PLC DEC ±-
3 PLC DEC ±-
4 PLC DEC ±-
ANGLES ± -
SURF TEXTURE: √
REMOVE BURRS, BREAK SHARP EDGES R.015 MAX

MATL	HT TR	FIN
–	–	–
–	–	–

DR	APP	AMP Incorporated Harrisburg, PA 17105-3608
3-20-95 D.SALTZER	3-23-95 T.BEDDICK	
CHK 3-23-95 C.ERISMAN	REL 4/20/95 B. MORGAN	

NAME: END FEED STANDARD APPLICATOR

MACHINE REF: STD APPL

SCALE: 1:4 | D | DWG NO: 565724-1 | SHEET: 1 OF 1 | REV: L

LOC: A | DIST: 4

THIS DRAWING IS A CONTROLLED DOCUMENT FOR AMP INCORPORATED. IT IS SUBJECT TO CHANGE AND THE CONTROLLING ENGINEERING ORGANIZATION SHOULD BE CONTACTED FOR THE LATEST REVISION.

THIS INFORMATION IS CONFIDENTIAL AND IS DISCLOSED TO YOU ON CONDITION THAT NO FURTHER DISCLOSURE IS MADE BY YOU TO OTHER THAN AMP PERSONNEL WITHOUT WRITTEN AUTHORIZATION FROM AMP INCORPORATED, HARRISBURG, PA.