PART NUMBER	ITEM ① BODY	ITEM ② BASE	ITEM ③ CONTACT (ONE PIECE)	ITEM ④ INSULATOR	ITEM ⑤ INSULATOR
142-0701-321	BRASS GOLD PL .00001 MIN OVER NICKEL PL .00005 MIN OVER COPPER PL .00005 MIN	BRASS GOLD PL .00001 MIN OVER NICKEL PL .00005 MIN OVER COPPER PL .00005 MIN	BERYLLIUM COPPER GOLD PL .00003 MIN OVER NICKEL PL .00005 MIN OVER COPPER PL .00005 MIN	TEFLON	TEFLON
142-0701-326	BRASS NICKEL PL .0001 MIN OVER COPPER PL .00005 MIN	BRASS NICKEL PL .0001 MIN OVER COPPER PL .00005 MIN	BERYLLIUM COPPER GOLD PL .00003 MIN OVER NICKEL PL .00005 MIN OVER COPPER PL .00005 MIN	TEFLON	TEFLON
142-0701-327	BRASS NICKEL PL .0001 MIN OVER COPPER PL .00005 MIN	BRASS NICKEL PL .0001 MIN OVER COPPER PL .00005 MIN	BERYLLIUM COPPER GOLD PL .00003 MIN OVER NICKEL PL .00005 MIN OVER COPPER PL .00005 MIN	TEFLON	TEFLON

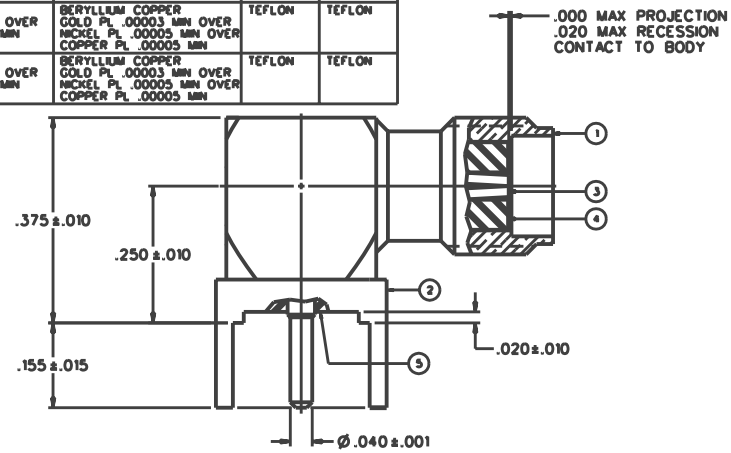

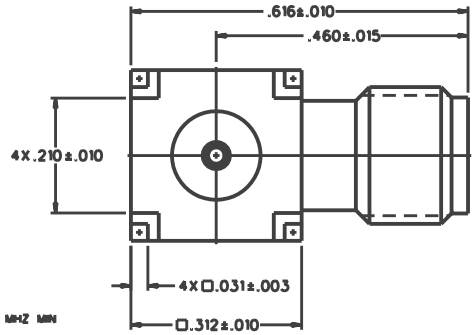

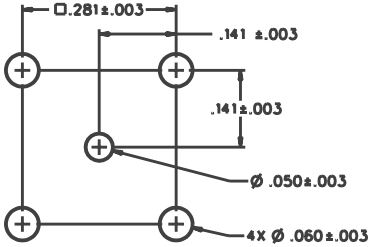

MOUNTING HOLE LAYOUT

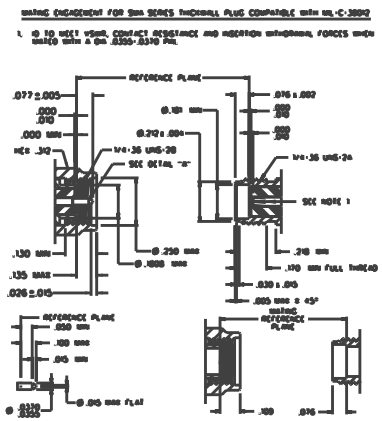

NOTES:

1. SPECIFICATIONS:

IMPEDANCE: 50 OHMS
FREQUENCY RANGE: 0.5-18 GHZ
VSWR: NOT APPLICABLE
WORKING VOLTAGE: 335 VRMS MAX AT SEA LEVEL
DIELECTRIC WITHSTANDING VOLTAGE: 1000 VRMS MIN AT SEA LEVEL
INSULATION RESISTANCE: 5000 MEGOHM MIN
CONTACT RESISTANCE:
CENTER CONTACT - INITIAL 3.0 MILLIOHM MAX, AFTER ENVIRONMENTAL 4.0 MILLIOHM MAX
OUTER CONDUCTOR - INITIAL 2.0 MILLIOHM MAX AFTER ENVIRONMENTAL NOT APPLICABLE
BRAID TO BODY - NOT APPLICABLE
CORONA LEVEL: 250 VOLTS MIN AT 70,000 FEET
INSERTION LOSS: NOT APPLICABLE
RF LEAKAGE: NOT APPLICABLE
RF HIGH POTENTIAL WITHSTANDING VOLTAGE: 670 VRMS AT 4 AND 7 MHZ MIN

MECHANICAL:

ENGAGE/DISENGAGE TORQUE: 2 INCH-POUNDS MAX
MATING TORQUE: 7-10 INCH POUNDS
COUPLING PROOF TORQUE: 15 INCH-POUNDS MIN
COUPLING NUT RETENTION: NOT APPLICABLE
CONTACT RETENTION: 6 LBS MIN AXIAL FORCE
CABLE ACCEPTABILITY: NOT APPLICABLE
CABLE HEX CRIMP SIZE: NOT APPLICABLE
CABLE RETENTION: NOT APPLICABLE
DURABILITY: 500 CYCLES MIN

ENVIRONMENTAL:

(MEETS OR EXCEEDS THE APPLICABLE PARAGRAPH OF MIL-C-39012)
THERMAL SHOCK: MIL-STD-202, METHOD 107, CONDITION B
OPERATING TEMPERATURE: -65 DEG C TO 185 DEG C
CORROSION: MIL-STD-202, METHOD 101, CONDITION B
SHOCK: MIL-STD-202, METHOD 213, CONDITION I
VIBRATION: MIL-STD-202, METHOD 204, CONDITION D

DRAWING NO.
C - 142-0701-321/330

0	REVISIONS		
ENGINEERING RELEASE			
2	3-16-92	RHM	3-20-90 ECO 40909
ADDED: P/N 142-0701-327 CHANGED: RF HIGH POT 4 AND 7 MHZ MIN WAS 5 MHZ MIN			
3	3-18-93	RHM	1-25-93 ECO 41607
ADDED: CONTACT LOCATION			
4	3-18-93	RHM	1-25-93 ECO 41756
VERSION UPDATE			
4a	3-10-94	RHM	3-29-94 ECN 42347
UPDATED GRAPHICS			
5	11-7-94	RHM	11-10-94 ECN 42783
CHANGED: UPDATED GRAPHICS			
5a	9-22-97	RHM	ECN 44926
VERSION UPDATE			
5b	3-20-01	RHM	ECN 47504

* REVISION NUMBER FOLLOWED BY AN ALPHA *
* CHARACTER INDICATES DRAWING CLARIFI- *
* CATION OR PART NUMBER ADDITION ONLY. *

CUSTOMER DRAWING

THIS DRAWING TO BE INTERPRETED PER ANSI Y 14.5M - 1982

"μSTATION"

COMPANY CONFIDENTIAL

TOLERANCE UNLESS OTHERWISE SPECIFIED		DRAWN BY RJB	DATE 2-5-92	JOHNSON Components® 299 Johnson Ave. P.O. Box 1732 Waseca, MN 56093-0832
DECIMALS .XX	mm	CHECKED BY	DATE	TITLE JACK ASSEMBLY, RA PC MOUNT SMA
.XXX		APPROVED BY RJB	DATE 3-16-92	
MATL		APPROVED BY	DATE	CODE NO. / DRAWING NO. C - 142-0701-321/330
FINISH		RELEASE DATE 3-20-92		SCALE 7:1 / UM INCH / SHEET 2 OF 2