NOTES:

1. MATERIALS OF FINISHES:
   FERRULE - BRASS, GOLD PLATING
   COVER - BRASS, GOLD PLATING
   RETAINER RING - SUS 304, NATURAL
   GASKET - SILICONE RUBBER, RED
   BODY - BRASS, GOLD PLATING
   CONTACT PIN - BERYLLIUM COPPER, GOLD PLATING
   INSULATOR - PTFE, NATURAL

2. ELECTRICAL:
   A. IMPEDANCE: 50 OHM
   B. FREQUENCY RANGE: 0-6 GHZ
   C. VSWR(RETURN LOSS): 1.3 MAX.
   D. DIELECTRIC WITHSTANDING VOLTAGE: 1000 VRMS, MIN.

3. MECHANICAL:
   A. DURABILITY: 500 CYCLES MIN.
   B. TEMPERATURE RANGE: -40°C TO +85°C

4. CRIMPED FERRULE HEX. CRIMP SIZE .255"

5. CONTACT PIN TO SOLDER

THIRD ANGLE PROJ.

REVISIONS				
REV	DESCRIPTION	DATE	ECN	APPR
NC	INITIAL RELEASE	16-Mar-11	-----	MZ
A	SYNC, REDRAWN IN THE PRO/E	23-Jun-14	-----	MZ
B	CORRECT THE HOUSING SHAPE & UPDATE TITLE	07-Jan-19	10142	SH

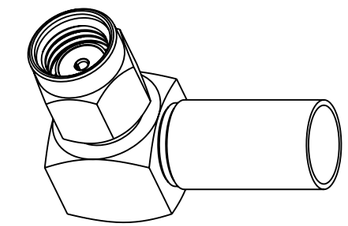

SCALE 2.000

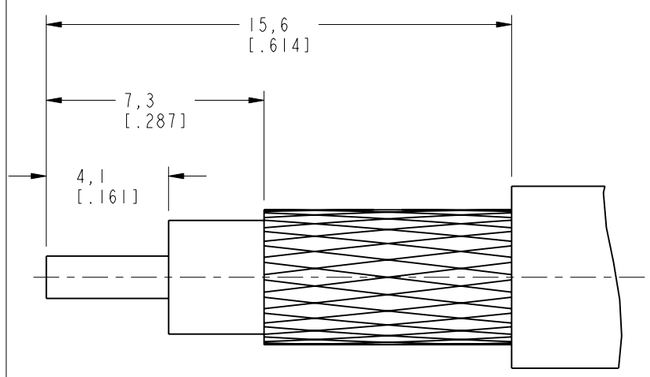

RECOMMENDED
CABLE STRIPPING DIM'S

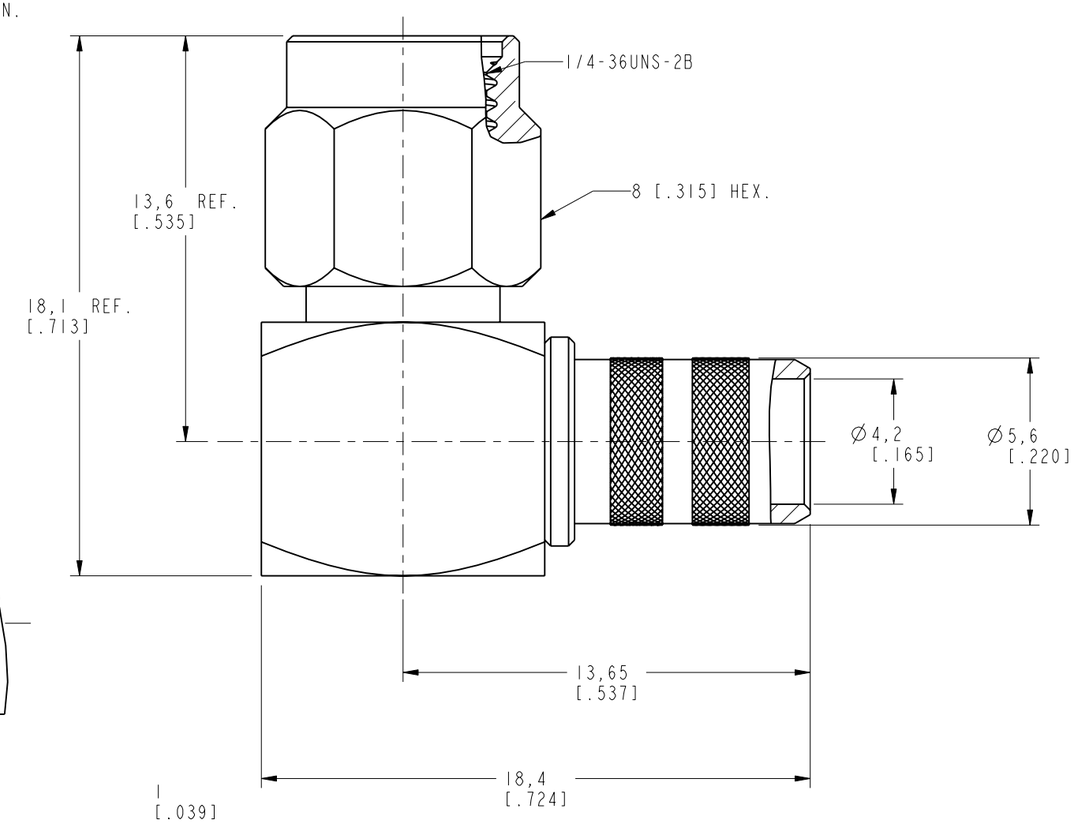

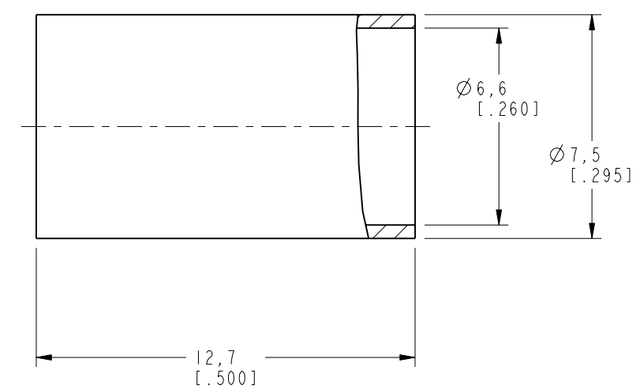

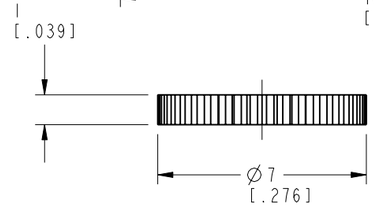

CUSTOMER OUTLINE DRAWING

ALL OTHER SHEETS ARE FOR INTERNAL USE ONLY

UNLESS OTHERWISE SPECIFIED, DIMENSIONS ARE IN METRIC AND TOLERANCES ARE:

<0.5mm	0.5 - 6mm	6 - 30mm	30 - 120mm	ANGLES
± 0.05mm	±0.1mm	±0.2mm	± 0.3mm	±1°

NOTICE - These drawings, specifications, or other data (1) are, and remain the property of Amphenol corp. (2) must be returned upon request; and (3) are confidential and not to be disclosed to any person other than those to whom they are given by Amphenol Corp. the furnishing of these drawings, specifications, or other data by Amphenol Corp., or to any other person to anyone for any purpose is not to be regarded by implication or otherwise in any manner licensing, granting rights to permitting such holder or any other person to manufacture, use or sell any product, process or design, patented or otherwise, that may in any way be related to or disclosed by said drawings, specifications, or other data.

MATERIAL
-

REFERENCE
EAR#
REF:

CONFIGURATION LEVEL: In Work

FINISH

	DATE
DRAWN M.ZHANG	07-Jan-19
ENGINEER S.DUAN	23-Jun-14
APPROVED S.HSIEH	07-Jan-19
CAD FILE	

TITLE
SMA REVERSE POLARITY
R/A CRIMP PLUG
(FOR RG-8/X CABLE)

SCALE: 5.0:1.0 | SHEET 2 OF 2

DWG SIZE B | REV B

Amphenol RF
www.amphenolrf.com

DRAWING NO. RSMA1112A1-3GT5GP-8X-50
ITEM NO. 611112AAA89FR5F
PART NO. 132239RP