THIS DRAWING IS UNPUBLISHED. RELEASED FOR PUBLICATION -,- .
© COPYRIGHT - BY TYCO ELECTRONICS CORPORATION. ALL RIGHTS RESERVED.

| LOC | DIST |
|---|---|
| AF | 50 |

REVISIONS

| P | LTR | DESCRIPTION | DATE | DWN | APVD |
|---|---|---|---|---|---|
| | F1 | REVISED PER ECO-10-000443 | 18JAN10 | KK | HMR |

1. SPECIFICATIONS:
   TAB BLADE 2mm x 0.8mm
   OTHER SIZES MAY BE ACCOMMODATED,
   CONSULT TYCO ELECTRONICS
   FOR APPROVAL.
2. POCKET RECOMMENDATION: 1601441.
3. TERMINAL SUPPLIED ON REELS,
   CAN BE SUPPLIED LOOSE PIECE,
4. PRE-TIN PLATE OVER COPPER UNDERPLATE.
5. POST-TIN PLATE OVER NICKEL UNDERPLATE.
6. CARRIER STRIP THICKNESS OVER THREE TERMINALS
   INCLUSIVE NOT TO EXCEED .024 [0.61] MAX

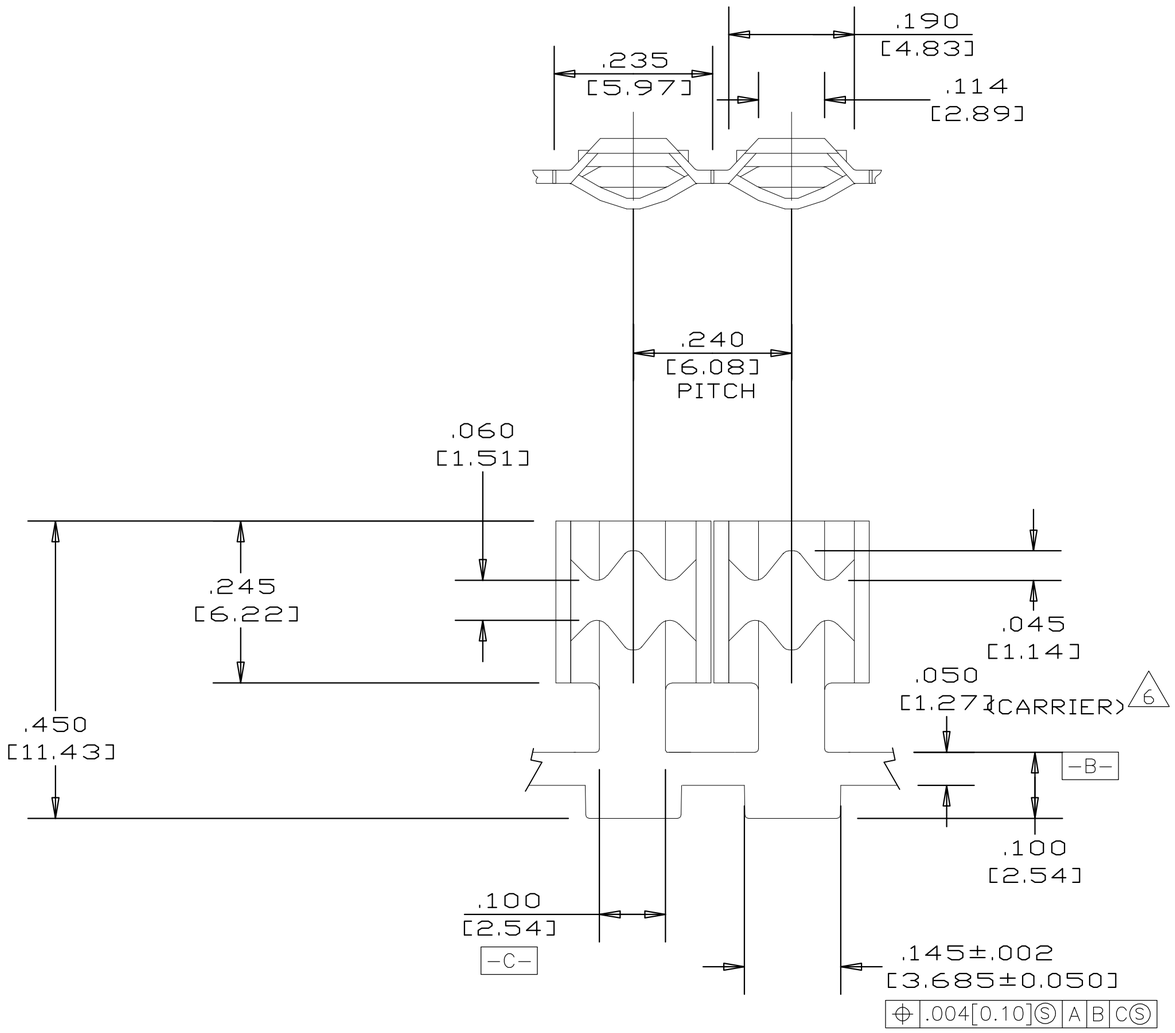


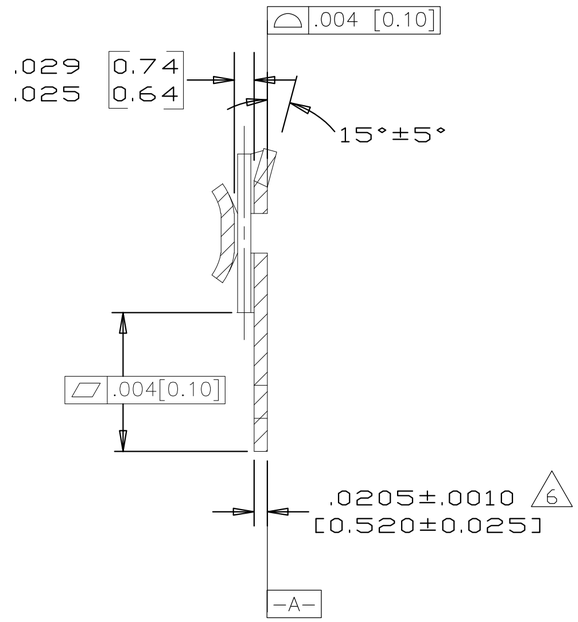


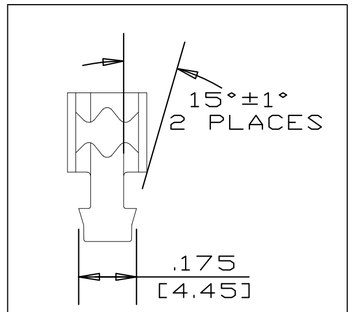


LOOSE PIECE CONFIGURATION
4-1601969-( ) SCALE 3:1

7 OBSOLETE PARTS: OBSOLETE CIS STREAMLINING
PER D.RENAUD/D.SINISI

| | | | | | |
|---|---|---|---|---|---|
| 7 OBSOLETE | H03 BRASS | N/A | 4 | 016-011-014 | ~~4-1601969-2~~ |
| | H02 PHOSPHOR BRONZE | MASONITE | 5 | N/A | 2-1601969-3 |
| | H03 BRASS | CARDBOARD | 4 | 116-012-014 | 2-1601969-2 |
| | H03 BRASS | CARDBOARD | 4 | 116-011-014 | 1601969-2 |
| | FINISH | FINISH | FINISH | REFERENCE PART NUMBER | TYCO PART NUMBER |

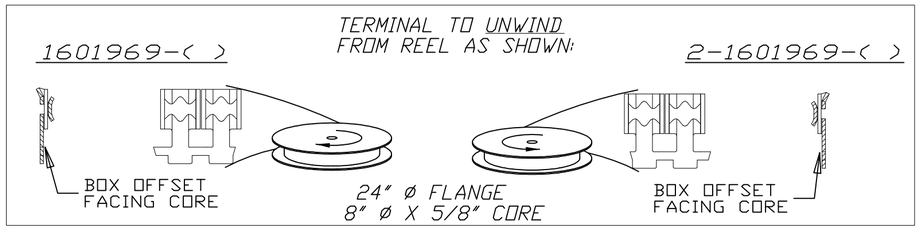


THIS DRAWING IS A CONTROLLED DOCUMENT.

DIMENSIONS: INCHES

TOLERANCES UNLESS OTHERWISE SPECIFIED:
0 PLC ± -
1 PLC ± -
2 PLC ± .01[0.25]
3 PLC ± .005[0.13]
4 PLC ± -
ANGLES ± 2°

MATERIAL: SEE TABLE
FINISH: SEE TABLE

DWN 28MAR2002 MICHAEL S. FEHER
CHK 28MAR2002 GENE JACONO
APVD 28MAR2002 GENE JACONO
PRODUCT SPEC —
APPLICATION SPEC —
WEIGHT —

Tyco Electronics
Tyco Electronics Corporation
Harrisburg, Pa 17105-3608

NAME: 2.0mm X 0.8mm BLADE RECEPTACLE TERMINAL

| SIZE | CAGE CODE | DRAWING NO | RESTRICTED TO |
|---|---|---|---|
| A2 | 00779 | C-1601969 | — |

CUSTOMER DRAWING | SCALE 6:1 | SHEET 1 OF 1 | REV F1

AMP 1471-9 REV 31MAR2000

H:\dmtecmod\1601969_1-c.dwg

1601969