NOTES :

1. MATERIAL : POLYCARBONATE / ACRYLONITRILE-BUTADIENE-STYRENE (PC/ABS)

2. PACKAGING : 10 NUMBERS OF MODULES ARE PACKED IN A BAG.

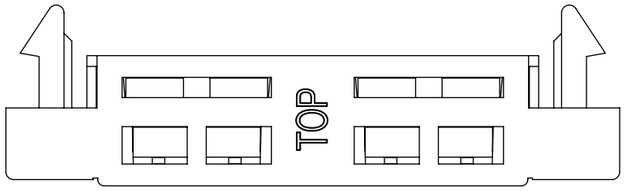

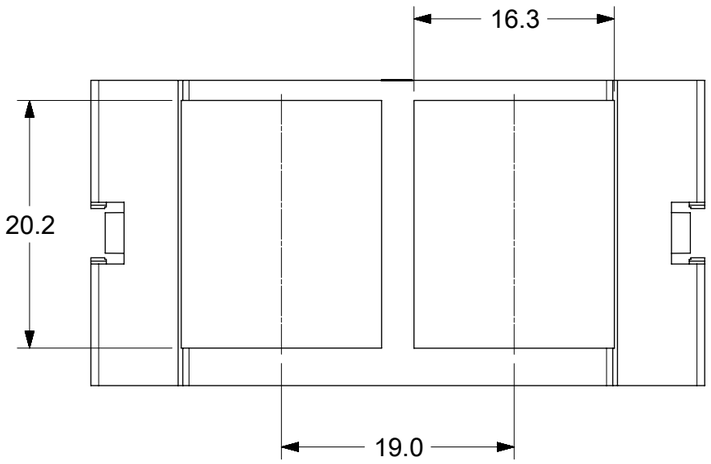

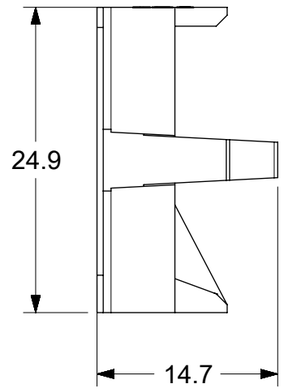

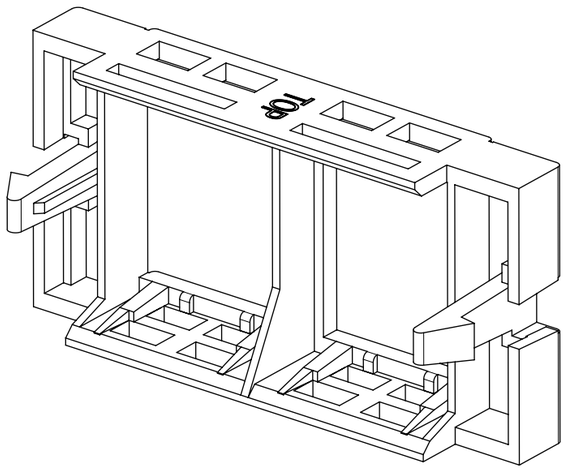

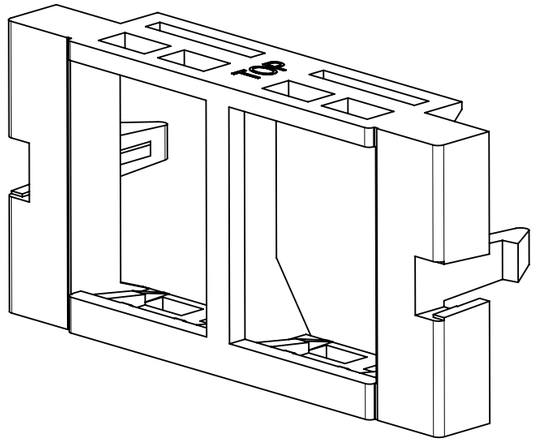

ISO VIEW

PART NUMBER CHART		
MPN NO.	SAP NO.	COLOR
MUS-00097-01	180070051	USOII 1U 2 PORT FASCIA LIGHT ALMOND
MUS-00097-02	180070052	USOII 1U 2 PORT FASCIA ASH WHITE
MUS-00097-04	180070054	USOII 1U 2 PORT FASCIA BLACK
MUS-00097-08	180070053	USOII 1U 2 PORT FASCIA PRG GRAY

SYMBOLS: = 0 (4 times), = 0 (3 times), = 0 (2 times), = 0, = 0, = 0, = 0

THIS DRAWING CONTAINS INFORMATION THAT IS PROPRIETARY TO MOLEX ELECTRONIC TECHNOLOGIES, LLC AND SHOULD NOT BE USED WITHOUT WRITTEN PERMISSION

DIMENSION UNITS	SCALE
mm	2:1

GENERAL TOLERANCES (UNLESS SPECIFIED)

ANGULAR TOL	±	°
4 PLACES	±	
3 PLACES	±	
2 PLACES	±	
1 PLACE	±	0.51
0 PLACES	±	

DRAFT WHERE APPLICABLE MUST REMAIN WITHIN DIMENSIONS

CURRENT REV DESC:

EC NO: 613277
DRWN: NBP 2019/03/05
CHK'D: RCG 2019/04/09
APPR: RCG 2019/04/09

INITIAL REVISION:
DRWN: PS03 2010/06/01
APPR: JKUMAR 2010/06/16

molex

USOII 1U 2 PORT FASCIA
- 10/ BAG

PRODUCT CUSTOMER DRAWING

DOCUMENT NUMBER	DOC TYPE	DOC PART	REVISION
SD-18007-005	PSD	001	B

THIRD ANGLE PROJECTION	DRAWING	SERIES	MATERIAL NUMBER	CUSTOMER	SHEET NUMBER
	A3-SIZE	18007	SEE TABLE	GENERAL MARKET	1 OF 1

DOCUMENT STATUS	P1	RELEASE DATE	2019/04/09 11:59:59

FORMAT: master-tb-prod-A3
REVISION: H
DATE: 2018/01/18