P.C. MOUNTING

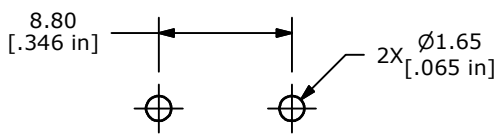

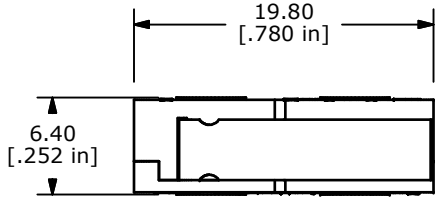

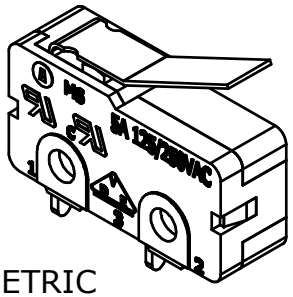

ISOMETRIC

O.P. (MM)	P.T. (MM)
13.9 ± 1.5	4.1 MAX.

O.P. = OPERATING POINT
P.T. = PRE-TRAVEL

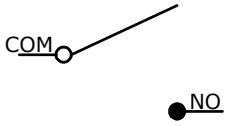

CIRCUIT: SPDT

NORMALLY OPEN

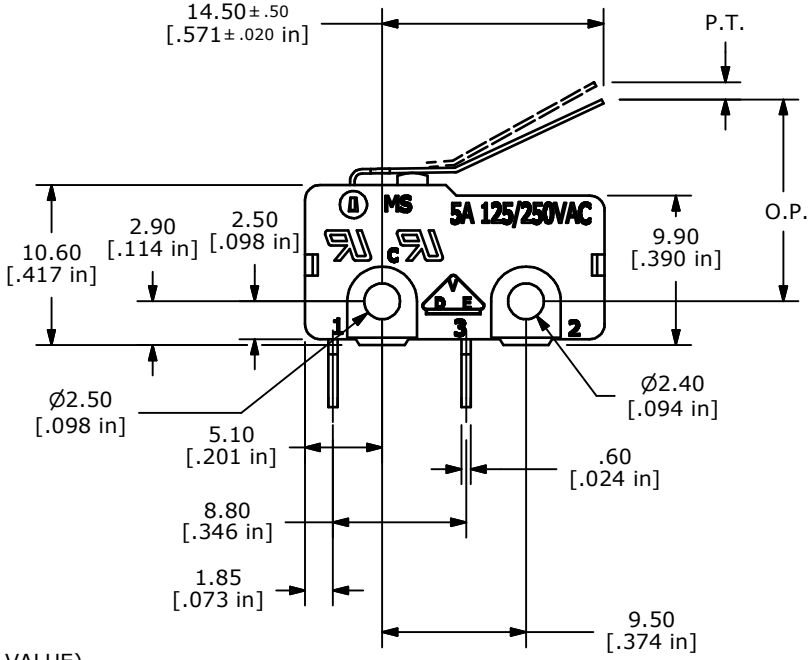

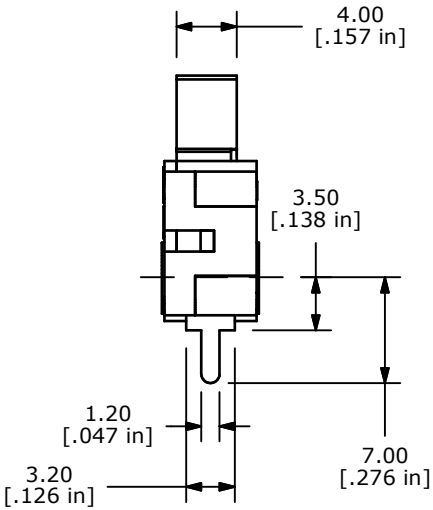

NOTES:
1. ALL DIMENSIONS IN MM [INCH]
2. GENERAL TOLERANCE: X.X=± 0.4
   X.XX=± 0.25
3. RATING: 5A @125/250VAC UL, CUL, VDE APPROVED
▲4. OPERATING FORCE: 35 ± 20 GRAMS
5. OPERATING TEMP: -25˚C TO 85˚C
6. ELECTRICAL LIFE: 50,000 CYCLES MIN.
7. MECHANICAL LIFE: 1,000,000 CYCLES TYP.
8. INSULATION RESISTANCE: 100 MEGA-OHMS
9. DIELECTRIC STRENGTH: 1000VAC 1 MINUTE (INITAL VALUE)
10. CONTACT RESISTANCE: 100 MILLI-OHMS MAX.
11. ▲ DENOTES CRITICAL PARAMETER.
12. 2002/95/EC (ROHS) COMPLIANT

REV	PCR NO	DESCRIPTION	DATE	BY
A	18603	Release For Production	8/13/09	BLR

THE INFORMATION CONTAINED IN THIS DOCUMENT IS PROPRIETARY TO E-SWITCH AND IS NOT TO BE COPIED OR TRANSFERRED

E-SWITCH® | LAMB INDUSTRIES™

TITLE MS0850506F035P1C

SCALE	DATE	DR	DWG	REV
2:1	8/13/2009	BLR	Q970106	A