THIS DRAWING IS IMPOBLISHED | RELEASED FOR PUBLICATION | 20
(C) COPYRIGHT 20 | BY TYCO ELECTRONICS CORPORATION | ALL RIGHTS RESERVED

LOC	SHEET
1K	2

REVISIONS

#	LTR	DESCRIPTION	DATE	DWN	APVD
	B1	ESEO-0070-03	01-Oct-03	JG	JG
	C	ESEO-0110-03	30-Nov-03	JG	JG
	D	ESEO-0122-03	17-Nov-03	JG	AP
	E	ESEO-0048-04	23-Mar-04	JG	JG

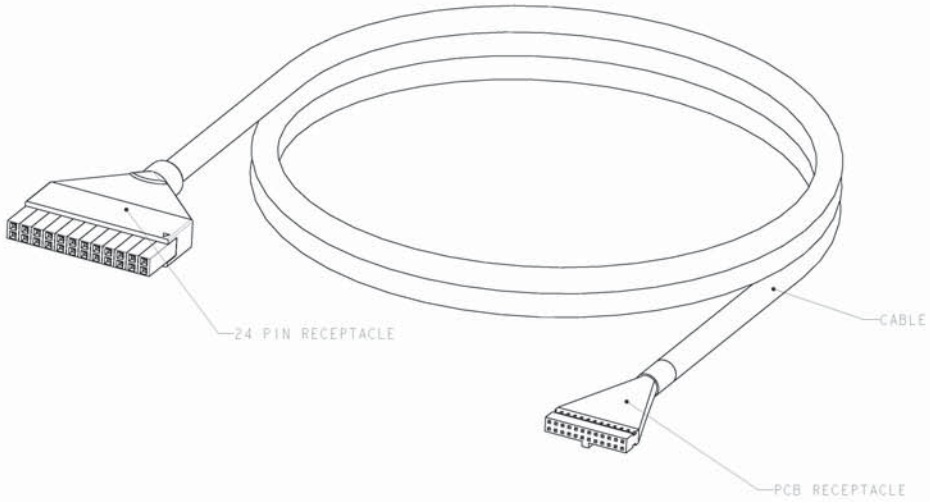

⚠ CABLE ASSEMBLY SHALL BE WIRED PER WIRING DIAGRAM.

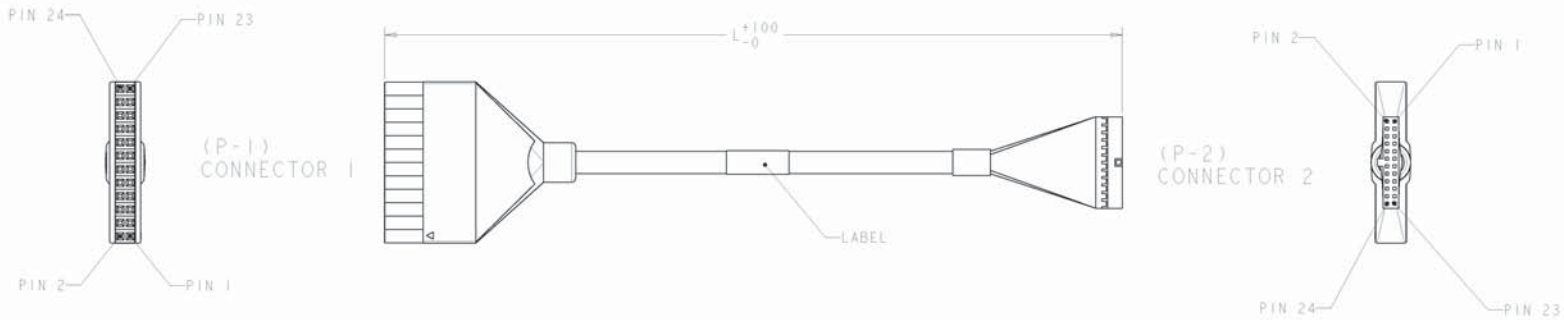

WIRING DIAGRAM ⚠

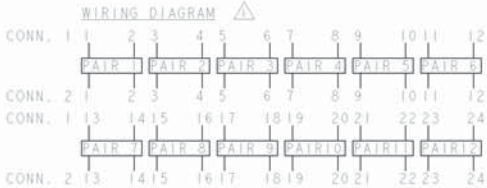

METER	L	PART NO.
15	15000.0	1-1435337-5
10	10000.0	1-1435337-0
5	5000.0 [196.85]	1435337-5
3	3000.0 [118.11]	1435337-3
2	2000.0 [78.74]	1435337-2
1	1000.0 [39.37]	143537-1

DWN. T. PITES	25JUL02	tyco Electronics — Tyco Electronics AMP España S.A. Barcelona, Spain
CHK. L. SMITH	25JUL02	
APVD. P. PERE	25JUL02	NAME: AMPTRAC I/O CABLE TO PCB LSZH
PRODUCT SPEC		
APPLICATION SPEC		SIZE A1 · CAGE CODE 00779 · DRAWING NO. C-1435337 · RESTRICTED TO -
WEIGHT -		
CUSTOMER DRAWING		SCALE NTS · SHEET 1 OF 1 · REV E

DIMENSIONS: mm [INCH]
TOLERANCES UNLESS OTHERWISE SPECIFIED: 0 PLC ±1°, 1 PLC ±0°, 2 PLC ±0°, 3 PLC ±0°, 4 PLC ±0°, ANGLES ±0°
MATERIAL -
FINISH -

AMP 4045 REV 5/MAR/2000
Pro/ENGINEER DRAWING