Für diese Unterlage behalten wir uns alle Rechte vor, auch für den Fall der Patenterteilung oder Gebrauchsmustereintragung. Sie darf ohne unsere vorherige schriftliche Zustimmung weder vervielfältigt noch sonstwie benutzt, noch Dritten zugänglich gemacht werden.

Nur rot gestempelte oder auf Laufkarte gedruckte Dokumente unterliegen dem Änderungsdienst und sind zur Fertigung freigegeben.
Only red stamped or on jobcard printed documents are managed. These documents are approved for production.

All Rights reserved, including possible patents or trademarks. Documents shall not be provided to a third party or duplicated in any form without prior written permission.

Additional coding
View in direction A

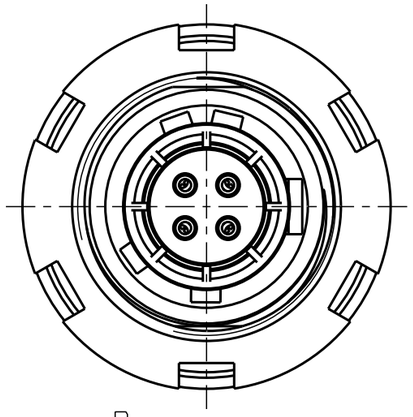

GKCWBM-PU4WBM0-000L
Mechanical coding: B
Color coding: red

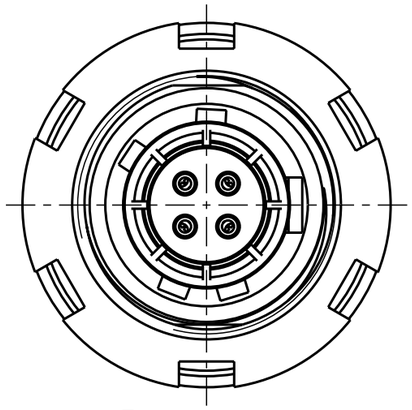

GKCWCM-PU4WBM0-000L
Mechanical coding: C
Color coding: blue

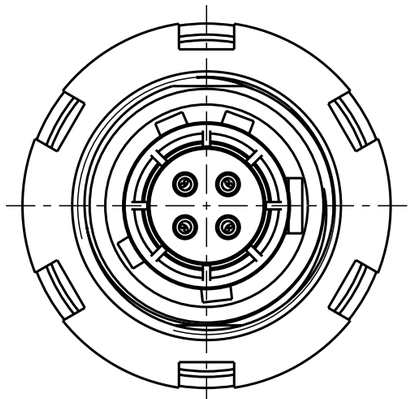

GKCWDM-PU4WBM0-000L
Mechanical coding: D
Color coding: green

Panel cut-out

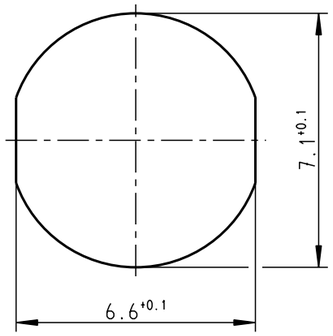

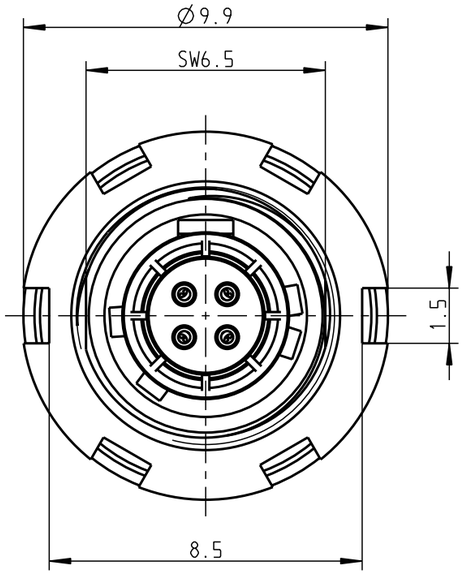

GKCWAM-PU4WBM0-000L
Mechanical coding: A
Color coding: light brown

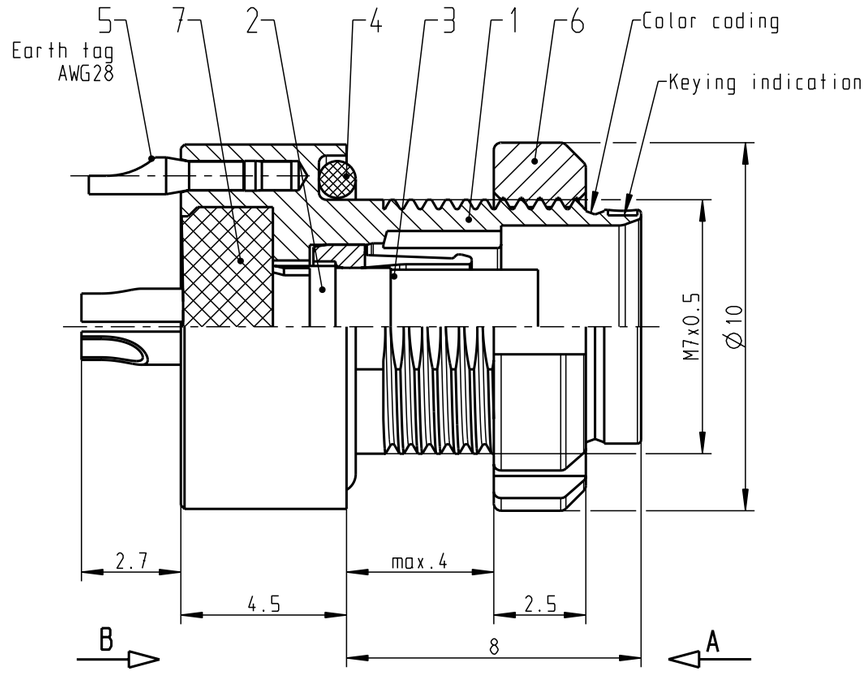

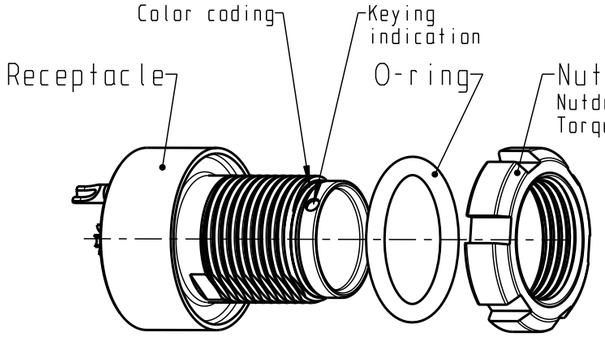

Delivery condition
3:1

Connection diagramm			
pos	name	color	description
1	D-	white(gold*)	Data-
2	VBUS	red	+5V
3	D+	green	Data+
4	GND	black(blue*)	Ground

*some manufacturers use

Only insert
View in direction B
10:1

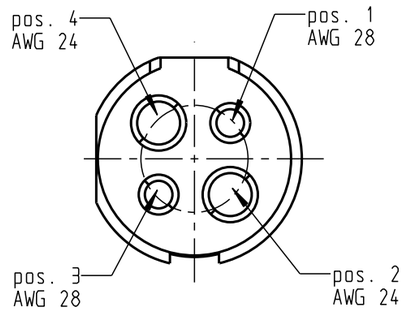

Technical information

- Solder contacts: AWG 24/AWG 28
- Current load: 3A@Δt40° (Single contact, AWG24)
  1A@Δt40° (Single contact, AWG28))
- Test voltage: 750V (acc. SAE AS 13441:1998, Contact to contact)
- Rated voltage: 250V (acc. SAE AS 13441:1998) 2)

1) ODU recommend an additional locking of the nut with adhesive (e.g. Loctite 2701) to the screw thread.

2) Maximal operating voltage at sea level up to 2.000 m. Rated voltage applies no other electrical safety standard. In case other standards rule a specific use of the connector, the application specific safety criteria shall be considered first. This must be evaluated in the frame of equipment engineering.

All shown connectors are according to DIN EN 61984:2009
connectors without breaking capacity (COC)!

index	notice	date	name

General tolerances to DIN ISO 2768-mK
Toleration to DIN ISO 8015

2014	date	name
prep.	14.11.	Aigner
app.		
norm.		

ODU
A perfect alliance.

PE-modell-nr.:

CAD-nr.: 00058456

sheet.:

designation: Receptacle

scale: 6:1

drawing nr.: GKCW.M-PU4WBM0-000L

copy nr.

replacement for:

CAD: Pro/ENGINEER