© 2022TE Connectivity. All Rights Reserved.

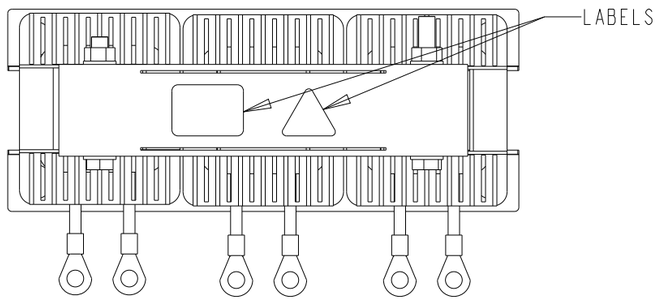

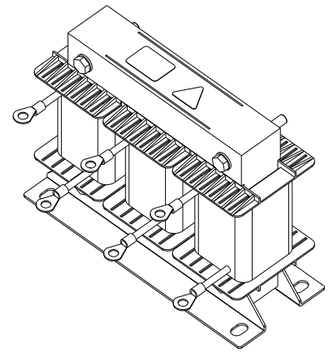

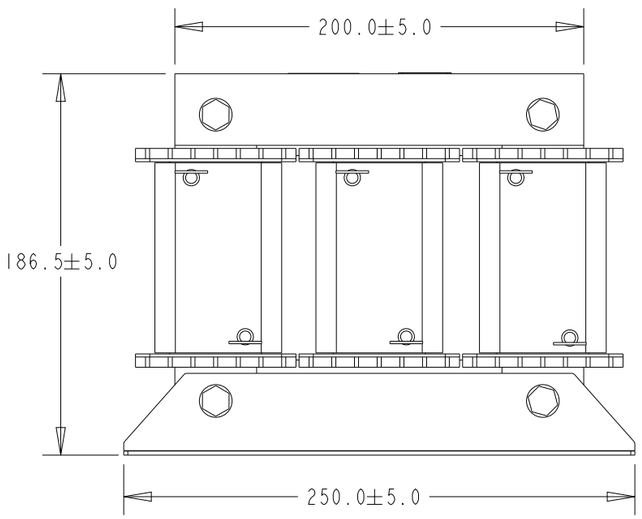

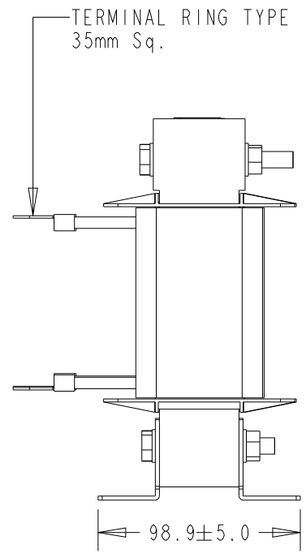

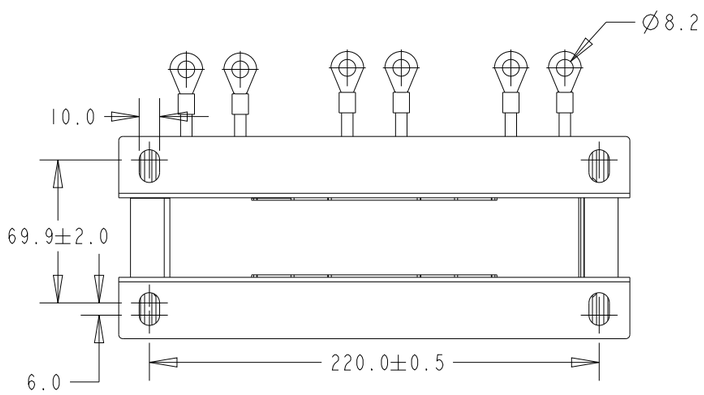

REVISIONS

P	LTR	DESCRIPTION	DATE	DWN	APVD
	A	RELEASED FOR PRODUCTION	10FEB2023	DM	CB
	A1	ADDING PRODUCT DATA	07MAR2023	DM	CB

NOMINAL OPERATING VOLTAGE (VAC)	3x 380 to 480
RATED OPERATING VOLTAGE (VAC)	3x 340 to 530
FREQUENCY (Hz)	50 / 60
RATED CURRENT (AMPS)	65.00
OP.TEMP. RANGE @ RATED CURRENT	-45°C to +45°C
RATED POWER @ 400VAC (kW)	40.53
RATED POWER @ 400VAC (HP)	54.33
IMPEDANCE @ 400VAC (%)	4
INDUCTANCE, NOMINAL (mH)	0.450
POWER OVERLOAD, 1 MINUTE EVERY HOUR	1.6
VOLTAGE WITHSTAND 1 MINUTE (kVAC)	2
POLLUTION DEGREE	PD2
COOLING	NATURAL
PROTECTION CLASS	IP00
INSULATION CLASS	N
STORAGE TEMPERATURE RANGE (°C)	-45°C to +100°C
CLIMATIC CATEGORY	45/100/21
DESIGN CORRESPONDING TO	EN61558-2-20, EN60076-6, UL61800-5-1

SAFETY ORGANIZATIONS

UL RECOGNIZED AS PER UL 508 HARDWARE CERTIFICATION

DE-RATING FORMULAE FOR OPERATION ABOVE 45°C AMBIENT CONDITIONS:

$$I = In\sqrt{\frac{100 - Ta\ new}{100 - 45}}$$

TYPICAL CIRCUIT DIAGRAM

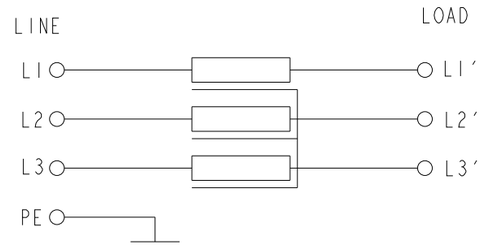

RoHS COMPLIANT

THIS DRAWING IS A CONTROLLED DOCUMENT.

DIMENSIONS: mm

TOLERANCES UNLESS OTHERWISE SPECIFIED:

0 PLC	±-
1 PLC	±0.1
2 PLC	±0.01
3 PLC	±0.001
4 PLC	±0.0001
ANGLES	±-

MATERIAL: - / -

FINISH: - / -

DWN	C.BOLLE	06OCT2022
CHK	C.BOLLE	06OCT2022
APVD	L.RAJ	06OCT2022
PRODUCT SPEC	-	
APPLICATION SPEC	-	
WEIGHT	-	

TE Connectivity

NAME: RPQ-3-65 THREE LINE REACTOR

SIZE	CAGE CODE	DRAWING NO	RESTRICTED TO
A3	00779	C-2-2432409-6	-

CUSTOMER DRAWING | SCALE 1:3 | SHEET 1 OF 1 | REV A1

1470-19 (3/13)