THIS COPY IS PROVIDED ON A RESTRICTED BASIS AND IS NOT TO BE USED IN ANY WAY DETRIMENTAL TO THE INTERESTS OF PANDUIT CORP.

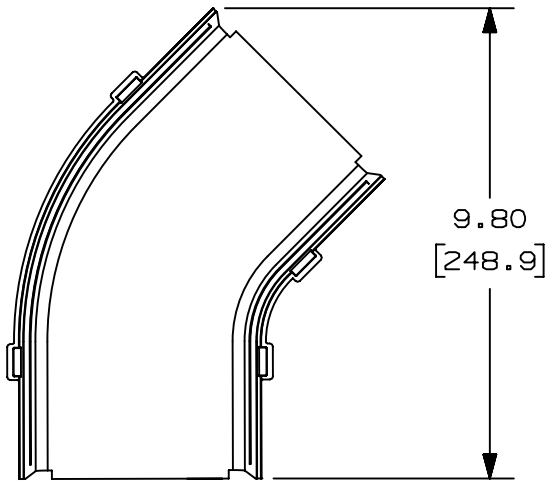

NOTES:

1. SEE CURRENT CATALOG FOR ADDITIONAL PART SUFFIXES TO INDICATE COLOR AND/OR PACKAGE QUANTITY.
2. THE FIBERRUNNER 4x4 HORIZONTAL 45° ANGLE FITTING IS DESIGNED WITH A MINIMUM 2" (50.8) BEND RADIUS TO PROTECT FIBER OPTIC CABLES.
3. DIMENSIONS IN PARENTHESES ARE IN METRIC.
4. PARTS SUPPLIED:
   (1)- HORIZONTAL 45°

PANDUIT PART NUMBER	WEIGHT	MATERIAL
FRH454X4**	0.59 LB/EACH (266g/EACH)	ABS
FRH454X4L**	0.59 LB/EACH (266g/EACH)	PC/ABS

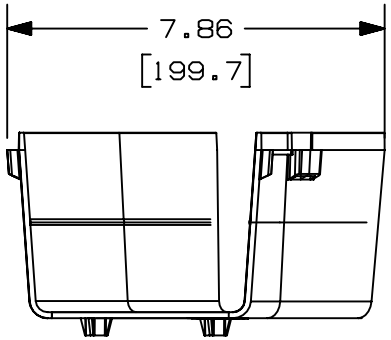

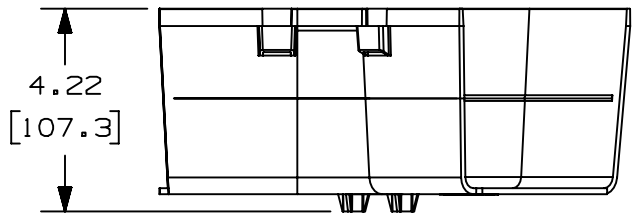

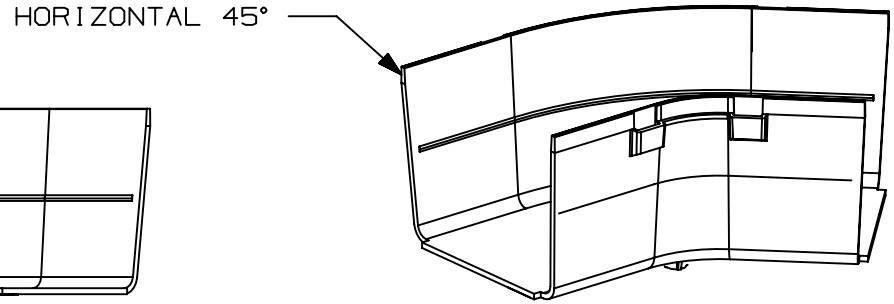

REV	DATE	BY	CHK	APR	DESCRIPTION	ECN
05A	9/1/20	MEX-JAGC	DWR	DWR	ADDED PART NUMBER UPDATED DRAWING BORDER & TITLE BLOCK	V09002DZ/11

TITLE
FIBERRUNNER 4x4 HORIZONTAL 45° ANGLE FITTING
(FRH454X4**, FRH454X4L**)
CUSTOMER DRAWING

ITEM REVISION NAME: D37847BM/05

DATASET FILE NAME: D37847BM_DC_FRH454X4/05A

PANDUIT

MATERIAL: SEE PART NUMBER TABLE ABOVE

THIRD ANGLE PROJECTION

DRAWING NUMBER: 37847-56

DRAWN BY	DATE	CHK	SCALE	SIZE
JHNU	7/16/01	RPA	NONE	A

SHT 1 OF 1

D10100DA/20