THIS DRAWING IS UNPUBLISHED. RELEASED FOR PUBLICATION 20
© COPYRIGHT 20 BY - ALL RIGHTS RESERVED.

LOC	DIST
AD	00

REVISIONS

P	LTR	DESCRIPTION	DATE	DWN	APVD
	E	REV PER ECO-12-018914	21NOV2012	WS	RP
	F	REV PER ECO-12-020324	15JAN2013	WS	RP
	G	REVISED PER ECO-19-012987	04SEP2019	AP	SY
	H	REVISED PER ECO-20-009694	13JUL2020	AP	SY

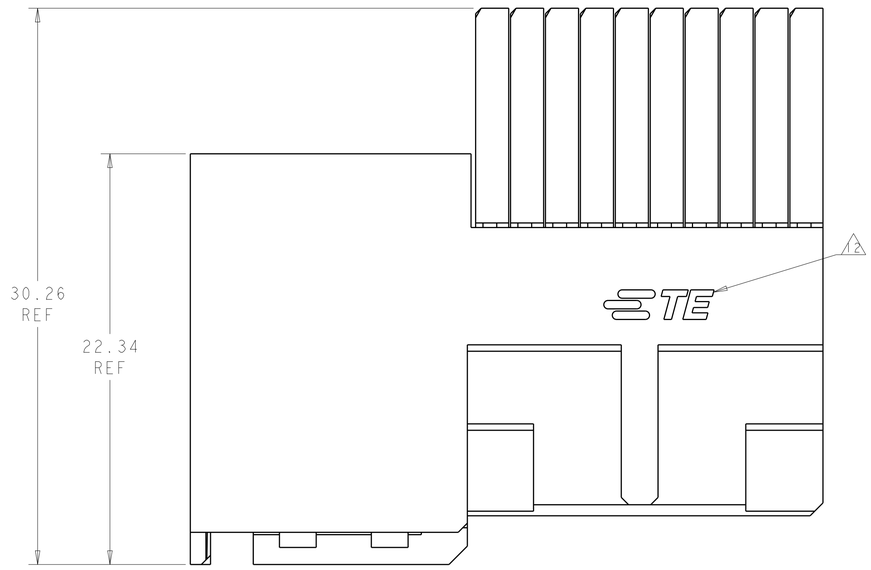

1. MATERIAL:
   CONTACT AND SHIELD - PHOS BRONZE
   HOUSING AND CHICKLET - LCP, UL 94V-0,
   COLOR - BLACK

2. FINISH:
   SIGNAL CONTACT: MATING AREA - 0.76µm MIN GOLD OVER 1.27µm MIN NICKEL
   COMPLIANT PIN AREA - 0.5µm BRIGHT TIN-LEAD OVER 1.27µm MIN NICKEL
   POWER CONTACT: MATING AREA - 0.08µm MIN GOLD OVER 0.68µm PdNi (TOTAL 0.76µm MIN)
   COMPLIANT PIN AREA: 0.5µm MIN TIN LEAD, ALL OVER 1.27µm MIN NICKEL
   SHIELD: 1.27µm MIN NICKEL

3. CONNECTOR MARKED ON EITHER SIDE OF HOUSING WITH PART NUMBER, DATE CODE AND STANDARD IN APPROXIMATE AREA SHOWN.

4. DIMENSION APPLIES TO CENTERLINE OF THRU HOLE.

5. DATUMS AND BASIC DIMENSIONS ESTABLISHED BY CUSTOMER.

6. CONTACT AREA LUBRICATED WITH BELLCORE APPROVED LUBRICANT. TECHNICAL REFERENCE: GR-1217-CORE, ISSUE 1, NOVEMBER 1995.

7. REFERENCE APPLICATION SPEC 114-13202 AND 114-1103 FOR RECOMMENDED PLATED THRU HOLE DIAMETER AND PLATING THICKNESSES.

8. THE GROUNDS IN EACH COLUMN ARE COMMONED.

9. HOLES ARE FOR USE IN SPECIAL APPLICATIONS USING DESCRETE COMPONENETS.

10. FINISH:
    SIGNAL CONTACT: MATING AREA - 0.76µm MIN GOLD OVER 1.27µm MIN NICKEL
    COMPLIANT PIN AREA - 0.5µm MATTE TIN OVER 1.27µm MIN NICKEL
    POWER CONTACT: MATING AREA - 0.08µm MIN GOLD OVER 0.68µm PdNi (TOTAL 0.76µm MIN)
    COMPLIANT PIN AREA: 0.5µm MIN MATTE TIN, ALL OVER 1.27µm MIN NICKEL
    SHIELD: 1.27µm MIN NICKEL

11. FINISH:
    SIGNAL CONTACT: MATING AREA - 0.076µm MIN GOLD OVER 0.68 PdNi (TOTAL 0.76µm MIN)
    COMPLIANT PIN AREA - 0.5µm MATTE TIN OVER 1.27µm MIN NICKEL
    POWER CONTACT: MATING AREA - 0.08µm MIN GOLD OVER 0.68µm PdNi (TOTAL 0.76µm MIN)
    COMPLIANT PIN AREA: 0.5µm MIN MATTE TIN, ALL OVER 1.27µm MIN NICKEL
    SHIELD: 1.27µm MIN NICKEL

12. SHOWN LOGO OR OTHER TE OWNED LOGOS IN APPROXIMATE AREA

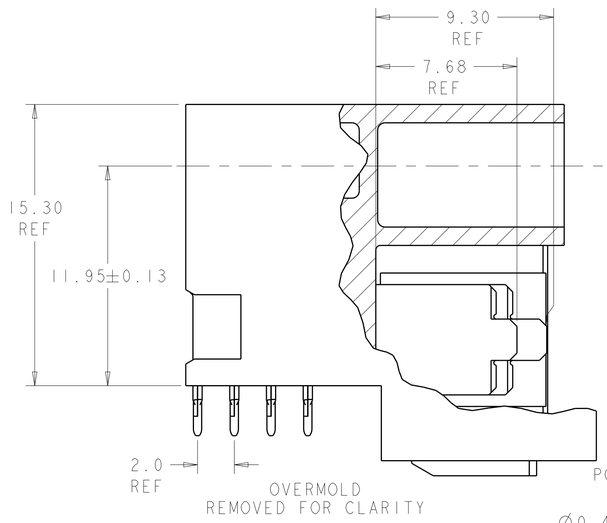

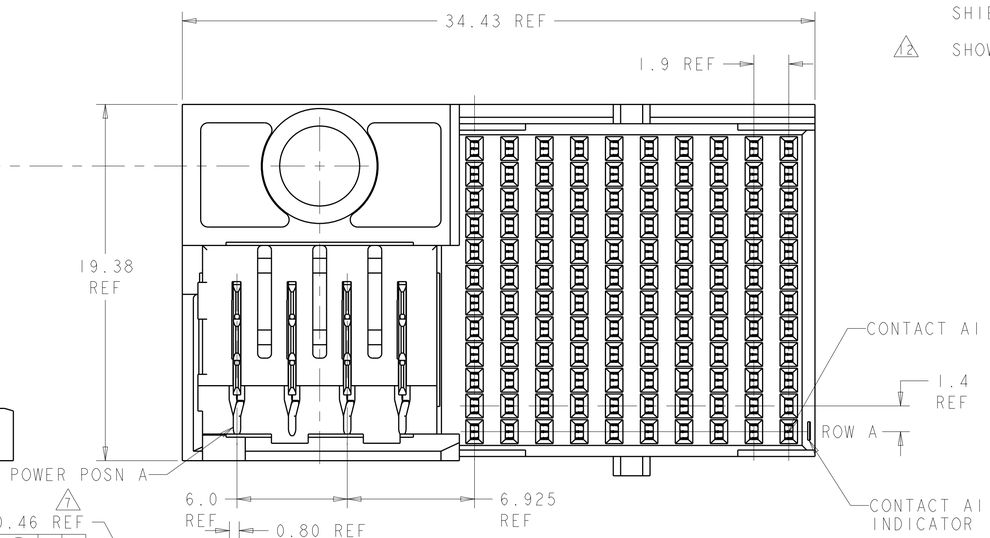

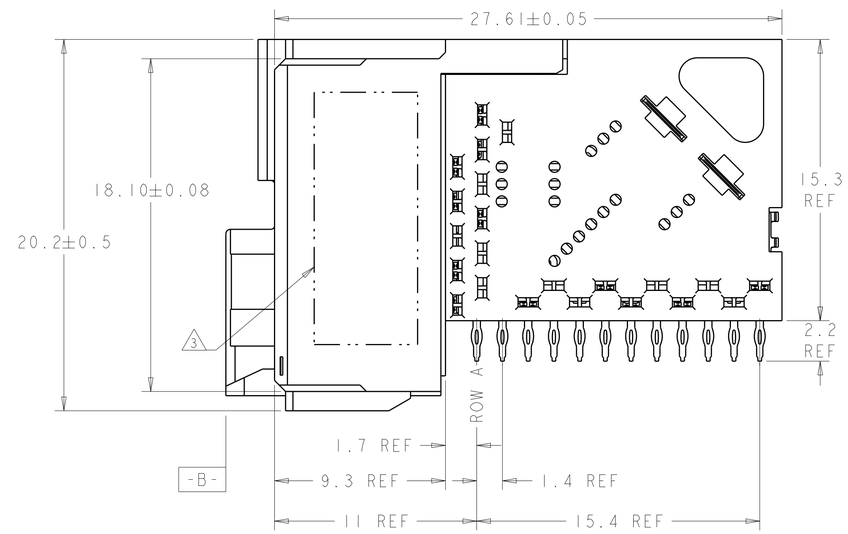

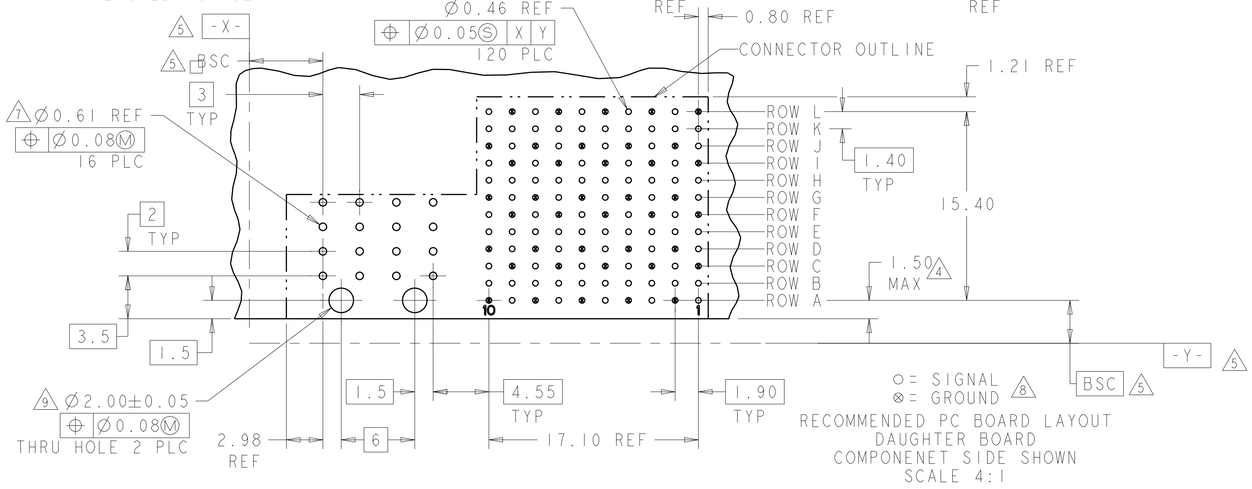

11	B & D	A & C	2065698-3
10	B & D	A & C	2065698-2
2	B & D	A & C	2065698-1
FINISH	POSITIONS LOADED WITH 9.3 REF CONTACTS	POSITIONS LOADED WITH 7.68 REF CONTACTS	PART NUMBER

THIS DRAWING IS A CONTROLLED DOCUMENT.

DIMENSIONS: mm

TOLERANCES UNLESS OTHERWISE SPECIFIED:
0 PLC ±
1 PLC ±
2 PLC ±
3 PLC ±
4 PLC ±
ANGLES ±

MATERIAL 1
FINISH 2

DWN B.CARBO 27APR2009
CHK R.PATTERSON 27APR2009
APVD R.PATTERSON 27APR2009
PRODUCT SPEC -
APPLICATION SPEC -
WEIGHT -

TE Connectivity

NAME RECEPTACLE ASSEMBLY, 4 PAIR, 10 COLUMN, WITH POWER

SIZE A1 | CAGE CODE 00779 | DRAWING NO C-2065698 | RESTRICTED TO

CUSTOMER DRAWING | SCALE 6:1 | SHEET 1 OF 1 | REV H

4805 (3/11)