THIS DRAWING IS UNPUBLISHED. RELEASED FOR PUBLICATION JAN ,2006.
© COPYRIGHT 2006 BY TYCO ELECTRONICS CORPORATION. ALL RIGHTS RESERVED.

LOC	DIST
E	B

REVISIONS

P	LTR	DESCRIPTION	DATE	DWN	APVD
	C	ECR-05-017969	09JAN06	JMS	FWK

NOTES:

1. PACK IN ACCORDANCE WITH AMP SPEC 107-3275
2. 100 TRAY PACK IN ACCORDANCE WITH AMP SPEC 107-3275
3. Au PLATING

4 ELECTRICAL CHARACTERISTICS

FREQUENCY RANGE:	DC – 4 GHz
NOMINAL IMPEDANCE:	50 Ohm
INSULATION RESISTANCE:	1000 MOhm
WORKING VOLTAGE:	250 Volts RMS at Sea Level
DIELECTRIC WITHSTAND VOLTAGE:	750 Volts RMS Max
CONTACT RESISTANCE:	
CENTRE CONTACT:	6.00 mOhm Max
OUTER CONTACT:	1.00 mOhm Max
VSWR @ 3GHz:	1.35:1
INSERTION LOSS dB @ x 1.5 GHz:	0.30 Max

5 MECHANICAL CHARACTERISTICS

COUPLING NUT RETENTION FORCE:	N/A
CABLE RETENTION FORCE:	
RG174A/U, 188A/U, 316/U, URM95:	85N Min
CLAMP NUT RECOMMENDED TORQUE:	0.6N
DURABILITY:	500 Cycles Min

6 ENVIRONMENTAL CHARACTERISTICS

OPERATING TEMPERATURE:	–65 to +165 DegC

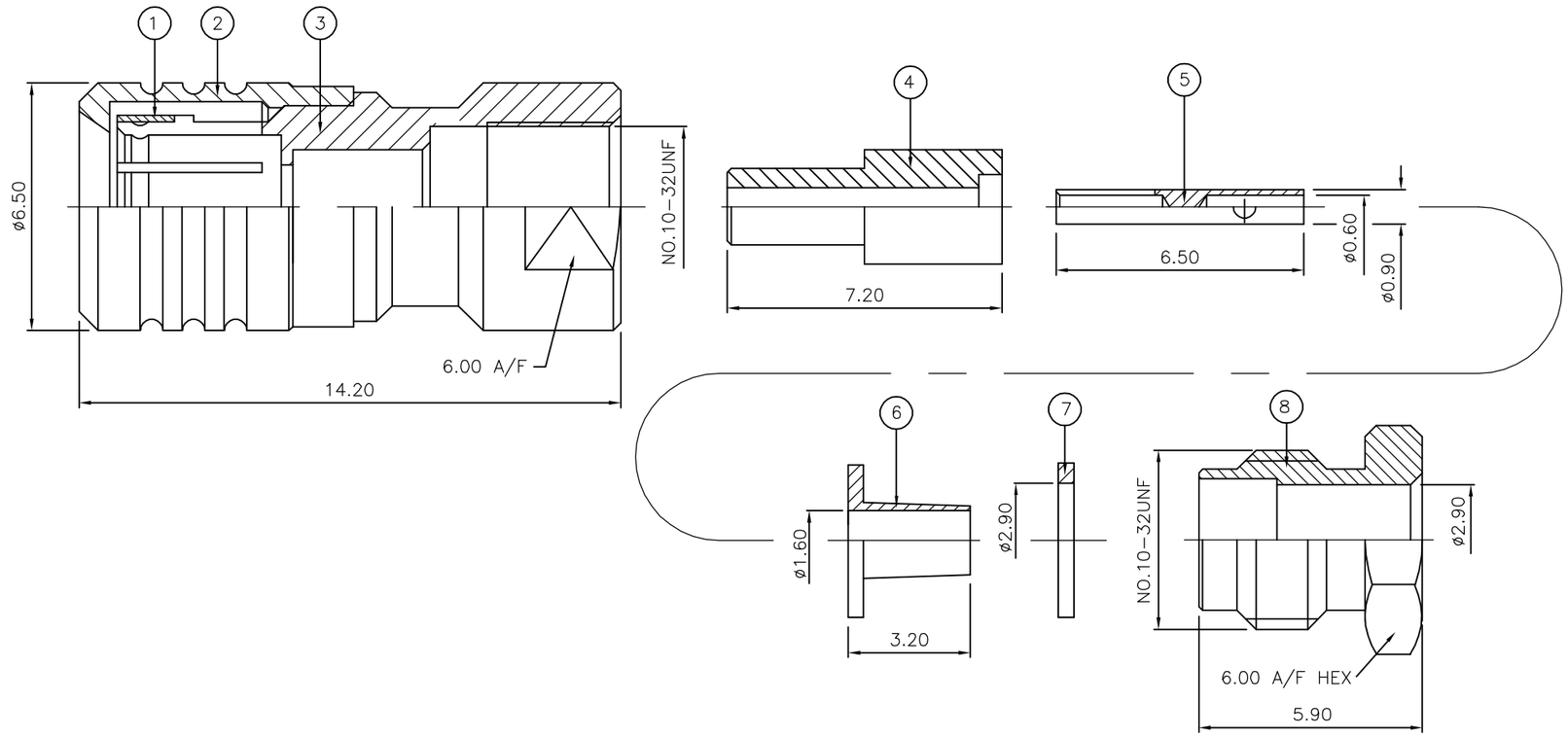

RECOMMENDED
CABLE STRIPPING DIM'S

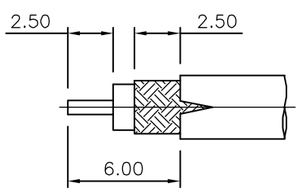

QUANTITY PER ASSY				MATERIAL	DESCRIPTION	ITEM
		1	1	BRASS (3)	CLAMP NUT	8
		1	1	BRASS (3)	WASHER	7
		1	1	BRASS (3)	FERRULE	6
		1	1	BERYLLIUM COPPER (3)	CONTACT	5
		1	1	PTFE	INSULATION	4
		1	1	BRASS (3)	BODY	3
		1	1	BRASS (3)	SHELL	2
		1	1	BERYLLIUM COPPER	SPRING	1
		6--0	1--0	MATERIAL	DESCRIPTION	ITEM
		(2)	(1)			

PARTS LIST

THIS DRAWING IS A CONTROLLED DOCUMENT.

DIMENSIONS: mm

TOLERANCES UNLESS OTHERWISE SPECIFIED:
0 PLC ± –
1 PLC ± –
2 PLC ± –
3 PLC ± –
4 PLC ± –
ANGLES ± –

MATERIAL: SEE TABLE

FINISH: –

DWN J.SANDWELL 09JAN06
CHK S.PARLOW 09JAN06
APVD F.WHEELER–KING 09JAN06
PRODUCT SPEC –
APPLICATION SPEC 411–3258
WEIGHT –

tyco Electronics
Tyco Electronics Corporation
Bideford EX39 4HE

NAME
SMB STRAIGHT PLUG SOLDER 50 OHM
RG174/U, 188A/U, 316/U, URM95, KX3B, KX22A
–

SIZE	CAGE CODE	DRAWING NO	RESTRICTED TO
A3	00779	C-1337475	–

CUSTOMER DRAWING

SCALE	SHEET	REV
NTS	1 OF 1	C