SHEET 1 OF 1

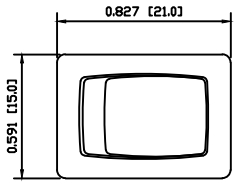

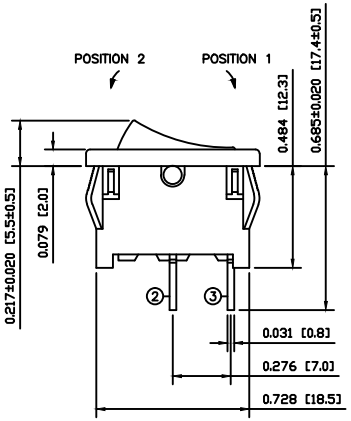

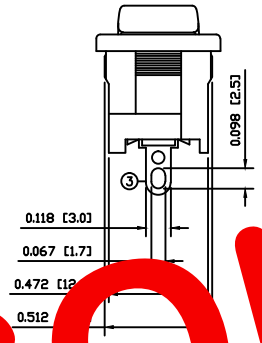

SCHEMATIC

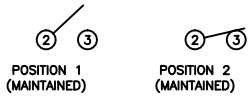

SPECIFICATIONS

FUNCTION:
1P1T OFF–ON

RATINGS:
ANSI/UL 1054 and CAN/CSA C22.2 No. 55 (E194579):
11A 125VAC [cURus]
5.5A 250VAC [cURus]

EN 61058–1:2002/VDE 0630–1: (40017067):
4A 250V~ 1E4 T55 [ENEC10, VDE]

CONTACT RESISTANCE:
Initial: 30mΩ Max. at 50VAC

INSULATION RESISTANCE:
500MΩ Min. at 500VDC

DIELECTRIC STRENGTH:
1,000VAC For 1 Minute

ELECTRICAL LIFE:
6,000 Cycles [cURus]
10,000 Cycles [ENEC10, VDE]

TEMPERATURE:
Operating: –20°C to 55°C [cURus]
Operating: –20°C to 55°C [ENEC10, VDE]

APPROVALS:
RoHS COMPLIANT

COLORS AND MARKINGS

BODY:
Black

ACTUATOR:
Black

MARKING:
None

MARKING COLOR:
None

MATERIALS

BODY:
Polyamide 6/6 (PA66), UL94 V–2

ACTUATOR:
Polyamide 6/6 (PA66), UL94 V–2

SPRING:
Steel

PLUNGER:
Polyamide 6/6 (PA66), UL94 V–2

MOBILE CONTACT:
Silver Plated Copper

CONTACTS:
Silver Alloy Over Copper

TERMINALS:
Silver Plated Brass

OBSOLETED
March 2015

SUGGESTED PANEL CUTOUT

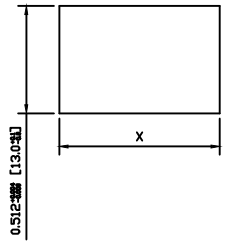

PANEL THICKNESS	X
0.020~0.049 [0.50~1.25]	0.764 [19.4]
0.049~0.079 [1.25~2.00]	0.775 [19.7]
0.079~0.118 [2.00~3.00]	0.787 [20.0]

REFERANCE	REV.	DATE	BY
ACTUATOR	A	09/07/28	CAB
BODY	A	09/07/28	CAB
COLORS	A	09/07/28	CAB
MATERIALS	A	09/07/28	CAB
SPECIFICATIONS	A	09/07/28	CAB

THE INFORMATION CONTAINED IN THIS DOCUMENT IS PROPRIETARY TO E–SWITCH–LAMB INDUSTRIES AND IS NOT TO BE COPIED OR TRANSFERRED

REV.	DESCRIPTION	PCR	DATE	DRAWN BY
A	INITIAL RELEASE	PCR00152	09/11/25	CAB

DIMENSIONS: INCHES [MILLIMETERS]
GENERAL TOLERANCES: ±0.008 [±0.2] / ±1°
SCALE: DRAWING NOT TO SCALE
PROJECTION

E•SWITCH® | LAMB™ INDUSTRIES

RA121A1100

DRAWING NUMBER	DATE	REVISION
03–RA121A1100	NOVEMBER 25, 2009	A