THIS COPY IS PROVIDED ON A RESTRICTED BASIS AND IS NOT TO BE USED IN ANY WAY DETRIMENTAL TO THE INTERESTS OF PANDUIT CORP.

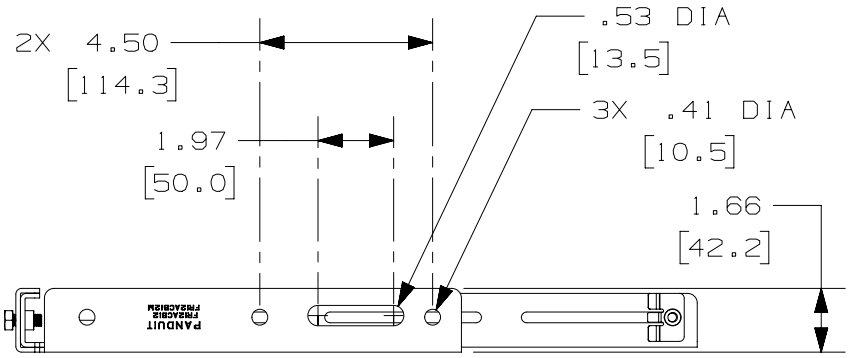

PANDUIT PART NUMBER	WEIGHT
FR12ACB12 FR12ACB12M	4.29 LB/EACH (1947g/EACH)

NOTES:

1. SEE CURRENT CATALOG FOR ADDITIONAL PART SUFFIXES TO INDICATE PACKAGE QUANTITY.
2. THE FIBERRUNNER 12x4 QUIKLOCK ADJUSTABLE "C" BRACKET IS USED TO SUPPORT THE FIBERRUNNER 12x4 CABLE ROUTING SYSTEM FROM A SECTION OF NEW 1/2" (M12) THREADED ROD (NOT INCLUDED) OR CAN BE DIRECTLY MOUNTED TO THE CEILING.
3. THE FIBERRUNNER 12x4 QUIKLOCK ADJUSTABLE "C" BRACKET INCLUDES:
   ONE (1) BRACKET ASSEMBLY,
   TWO (2) 1/2-13 HEAVY HEX NUTS (FR12ACB12 ONLY),
   TWO (2) M12x1.75 HEX NUTS (FR12ACB12M ONLY),
   TWO (2) 1/2 HELICAL SPRING LOCKWASHERS,
   ONE (1) 1/4-20 T-BOLT,
   ONE (1) 1/4-20 HEX KEPS LOCK NUT
4. FINISH COLOR: BLACK (EXCEPT HARDWARE)
5. DIMENSIONS IN PARENTHESES ARE IN METRIC.

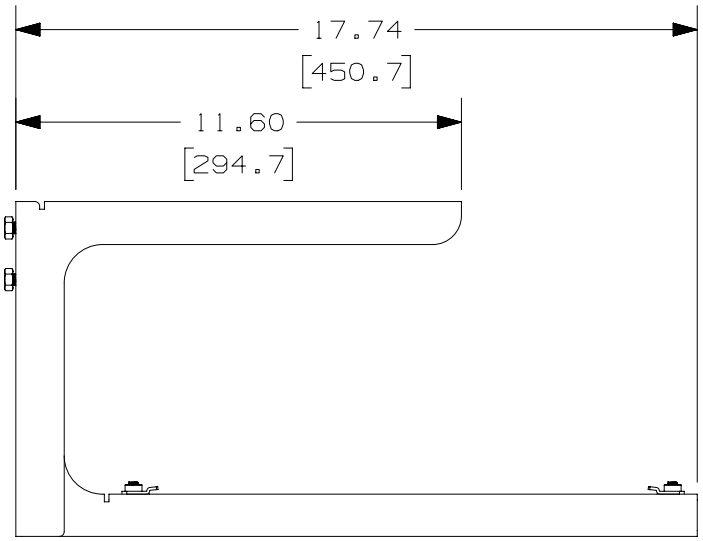

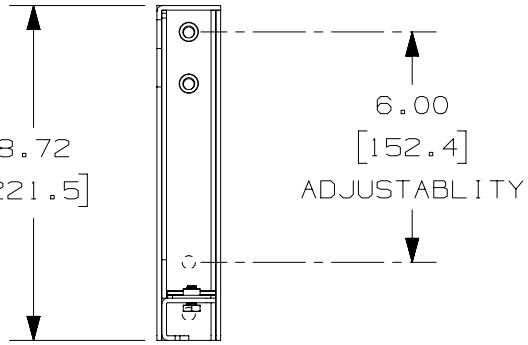

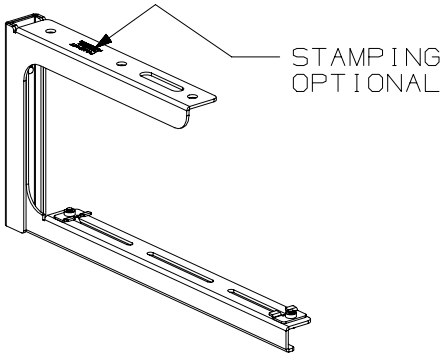

REV	DATE	BY	CHK	APR	DESCRIPTION	ECN
01B	9/2/19	MEX-JAGC	FWI	FWI	F. "STAMPING OPTIONAL" LABEL ADDED SEE PREVIOUS REVISION FOR HISTORY	V09002CN/00

TITLE

FIBERRUNNER 12x4 QUIKLOCK ADJUSTABLE "C" BRACKET - 1/2" (M12) THREADED ROD

CUSTOMER DRAWING

ITEM REVISION NAME: D37797ER/01

DATASET FILE NAME: D37797ER_DC/01B

UNLESS OTHERWISE SPECIFIED, DIMENSIONAL TOLERANCES ARE:

THIRD ANGLE PROJECTION

MATERIAL: N/A

DRAWING NUMBER: 37797-100

DRAWN BY	DATE	CHK	SCALE	SHT 1 OF 1	SIZE
JHNU	5/24/01	HIW	NONE		A

D10100DA/20