MODEL NO.	PACKAGING
147-0701-611	ONE PCS PER BAG

REV	ECO	DATE
001	ECO-17-0032	11/28/2017
002	ECO-18-0020	08/21/2018

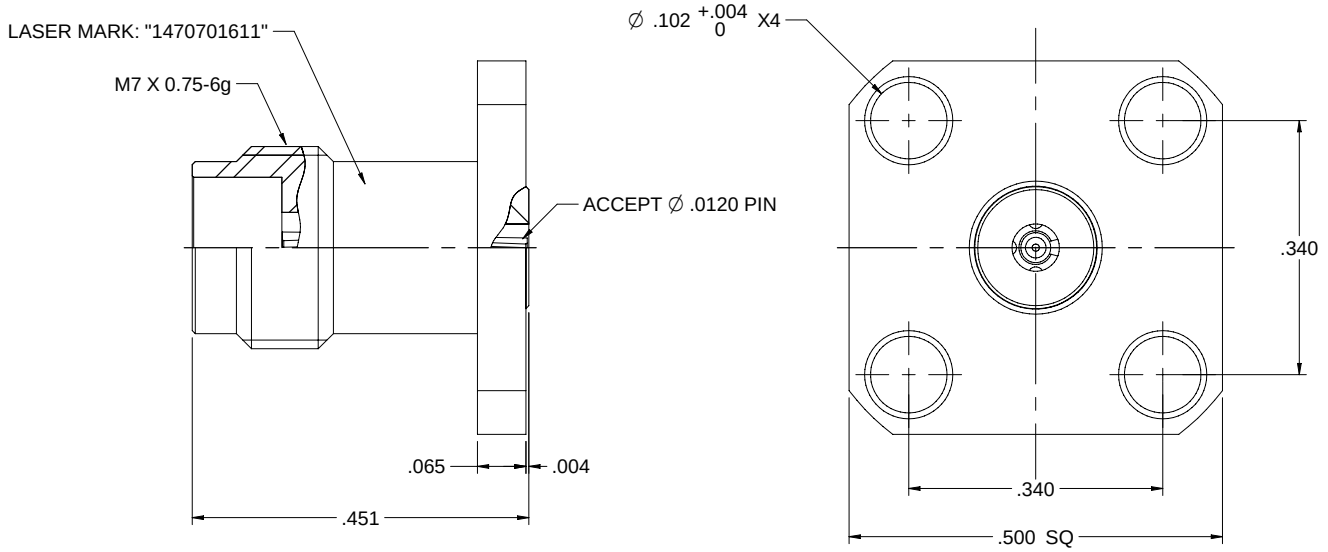

NOTES: UNLESS OTHERWISE SPECIFIED

1. MATERIAL & FINISH:
   1.1 BODY: PASSIVATED STAINLESS STEEL
   1.2 CONTACT PIN : GOLD PLATED BERYLLIUM COPPER
   1.3 INSULATOR: ULTEM 1000 AMBER
   1.4 LOCK RING: GOLD PLATED BRASS

2. ELECTRICAL:
   2.1 IMPEDANCE: 50 OHMS
   2.2 FREQUENCY RANGE: DC-50 GHz
   2.3 VOLTAGE STANDING WAVE RATIO: 1.2 MAX
   2.4 CONTACT RESISTANCE:
      2.4.1 CENTER CONTACT: 4 MILLIOHM MAX
      2.4.2 OUTER CONTACT: 2.5 MILLIOHM MAX
   2.5 DIELECTRIC WITHSTANDING VOLTAGE: 500 VRMS MIN
   2.6 INSULATION RESISTANCE: 5000 MOHM MIN

3. MECHANICAL:
   3.1 ENGAGEMENT/ DISENGAGEMENT FORCE: 0.23NM MAX
   3.2 CONTACT RETENTION: 20 N MIN
   3.3 DURABILITY: 500 CYCLES MIN

4. ENVIRONMENT:
   4.1 THERMAL SHOCK: MIL-STD-202, METHOD 107, CONDITION B.
   4.2 OPERATING TEMPERATURE: -65 TO 165°C
   4.3 SHOCK: MIL-STD-202, METHOD 213, CONDITION I
   4.4 VIBRATION: MIL-STD-202, METHOD 204, CONDITION D
   4.5 MOISTURE RESISTANCE: MIL-STD-202, METHOD 106

cinch

Model No. 147-0701-611

RoHS2 ☑ 2011/65/EU

Cage Code

3RD ANGLE PROJECTION

UNLESS OTHERWISE SPECIFIED UNITS INCH

.XXX ±.02
.XXX ±.01
ANGLES ±5°

Drawn by: Betty.Yu

Date: 08/21/2018

Johnson

Title: PANEL RECEPTACLE JACK,4 HOLE FLANGE, ACCEPTS 0.305mm PIN, 2.4mm

Drawing No. 147-0701-611

Rev. 002

Size C

DO NOT SCALE DRAWING

Workmanship Std NONE

Sheet 1 of 1