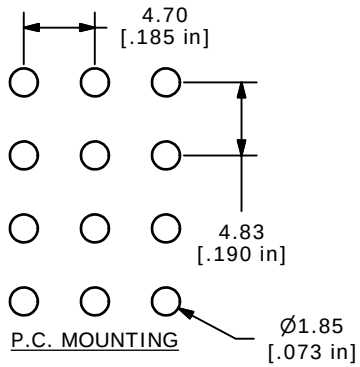

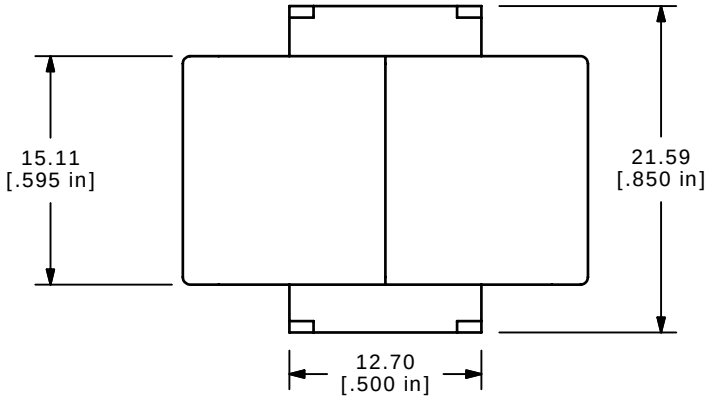

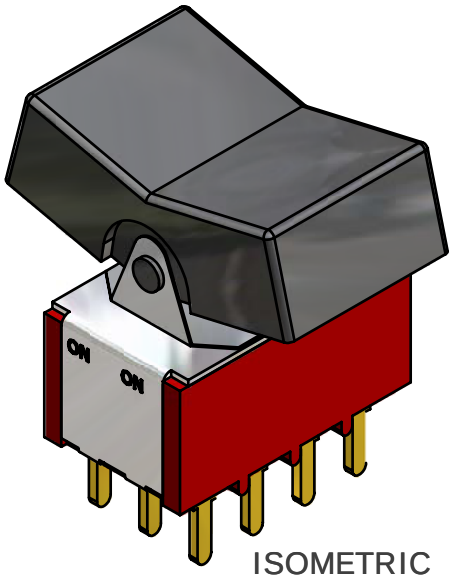

▲ SWITCH FUNCTION		
POS. 1	POS. 2	POS. 3
ON	NONE	ON
2-3, 5-6, 8-9, 11-2	N/A	2-1, 5-4, 8-7, 11-10

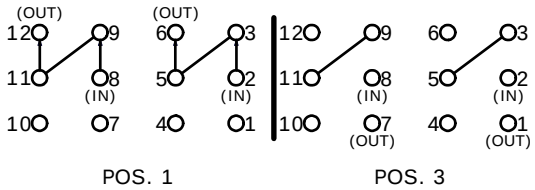

4PDT 2 WAY CIRCUIT
NOTE: JUMPER PIN 3 TO 5, 9 TO 11

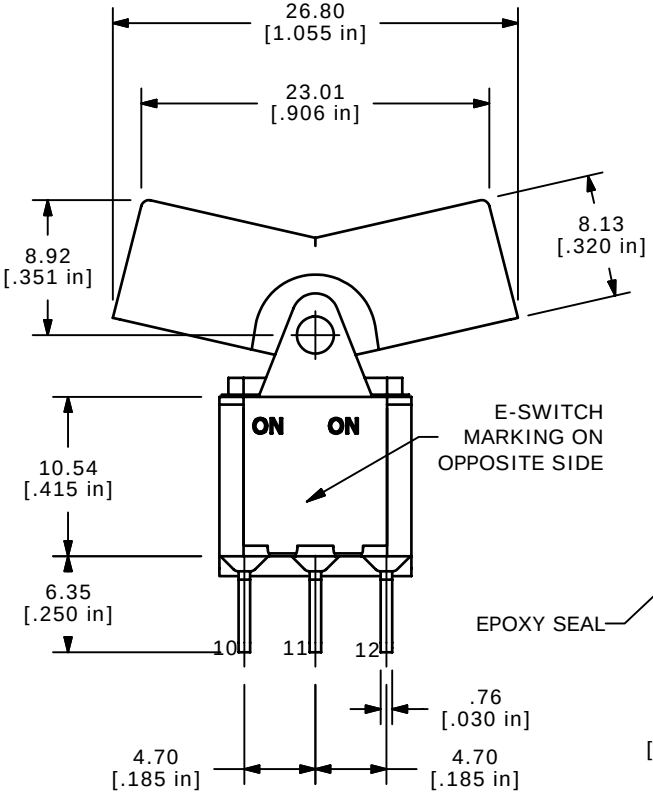

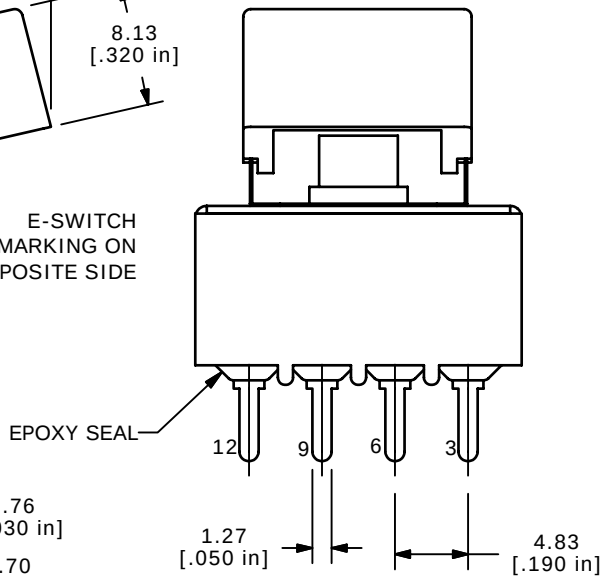

NOTE:
1. ALL DIMENSIONS IN MM [INCH]
2. GENERAL TOLERANCE: X.X=±0.4
   X.XX=±0.25
3. TERMINAL NUMBERS FOR REF ONLY
4. ▲ PLATING MATERIAL:SILVER
5. RATING: 2A @ 250VAC
   5A @ 120VAC OR 28VDC
6. ELECTRIC LIFE: 40,000 MAKE-AND-BREAK CYCLES
   AT FULL LOAD.
7. INSULATION RESISTANCE: 1,000 MEGA-OHM MIN.
8. DIELECTRIC STRENGTH: 1,000 V RMS @SEA LEVEL.
9. OPERATING TEMP.: -30°C to 85°C
10. ▲ DENOTES CRITICAL PARAMETER.
11. 2002/95/EC (ROHS) COMPLIANT

REV	PCR NO	DESCRIPTION	DATE	BY
A	15675	RELEASED FOR PRODUCTION	1/12/06	PH

THE INFORMATION CONTAINED IN THIS DOCUMENT IS PROPRIETARY TO E-SWITCH AND IS NOT TO BE COPIED OR TRANSFERRED

E-SWITCH®

TITLE 3004P1J3BLKM2QE

SCALE	DATE	DR	DWG	REV
2:1	1/12/2006	PH	T346017	A