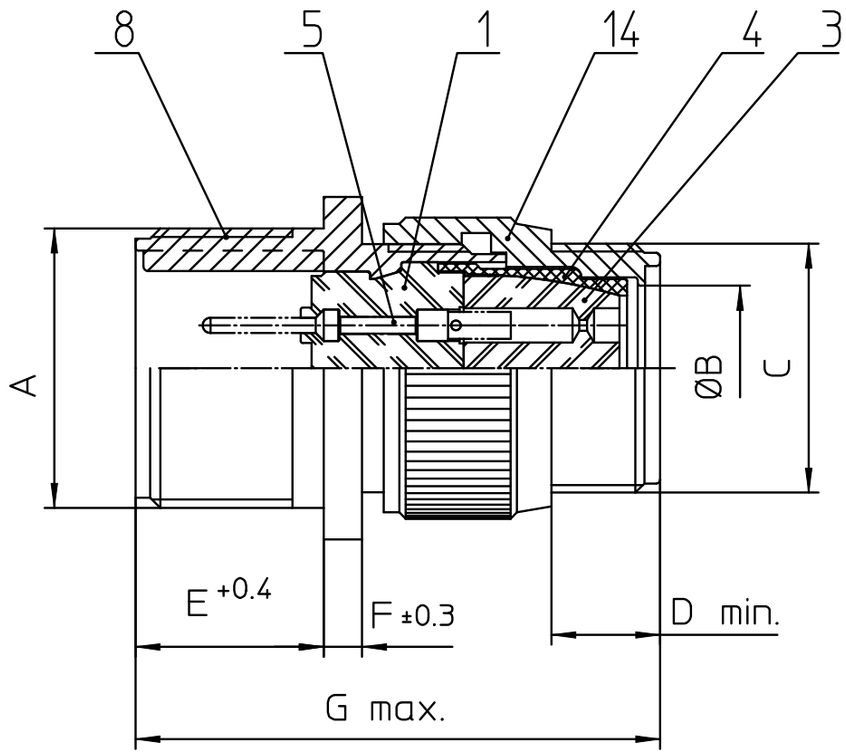

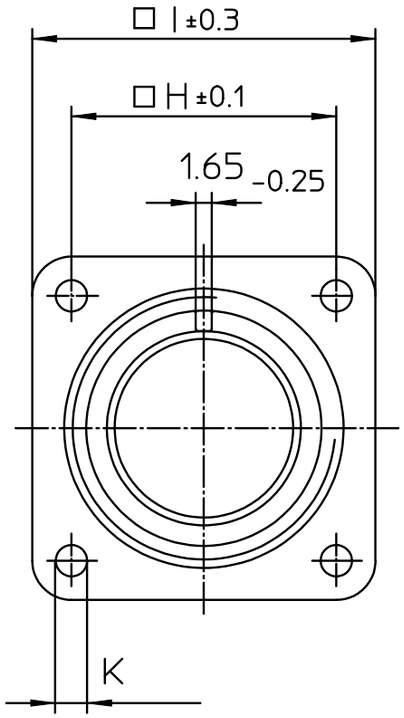

NO.	MASSE / DIMENSIO
A	2 1/4-16UN-2A
B	35.7
C	2-18NS-2A
D	11.8
E	22.2
F	4
G	64
H	49.2
I	63.5
K	4.4

NO.	BESCHREIBUNG / DESCRIPTION
1	ISOLIERKÖRPER STIFT / INSULATOR PIN
3	DICHTKÖRPER / GROMMET
4	ENDRING / ENDRING
5	KONTAKTSTIFT/ CONTACT PIN
8	DOSENGEHÄUSE / SHELL
14	F-ENDGEHÄUSE / F-ENDBELL

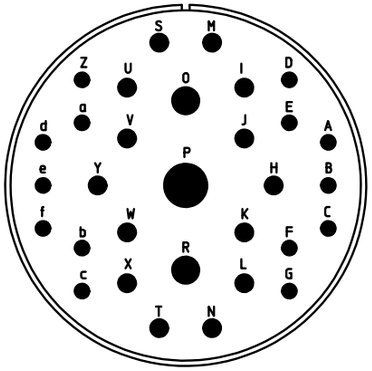

Note: Due to an automatic nomenclature system, numbers generated may not be sequential.

Specification and Dimensions subject to chang
Drawings illustrate normal insulator positioning

Material Specification:	
Shell Material:	Aluminium alloy
Shell Plating:	Olive drab chromate coating over cadmium plating
Insulator Material:	Neoprene
Contact Material:	Copper alloy
Contact Plating:	Hard silver

all dimensions are in mm
Dimensions without tolerance indications are general tolerances in acc. with DIN7168m

drawing for
CUSTOMER

ITT
Engineered for life
ITT CANNON GmbH
D - 71384 Weinstadt/Germany

description CA3100F36-9P-F80
Wall mounting receptacle
Endbell for flex tube
AWG Crimp / Pin / Layout: 36-9

© All rights reserved. Reproduction or issue to third in any form whatever is only permitted with written authorization of ITT Cannon

page 1/1

revision 929 11. Jun 19