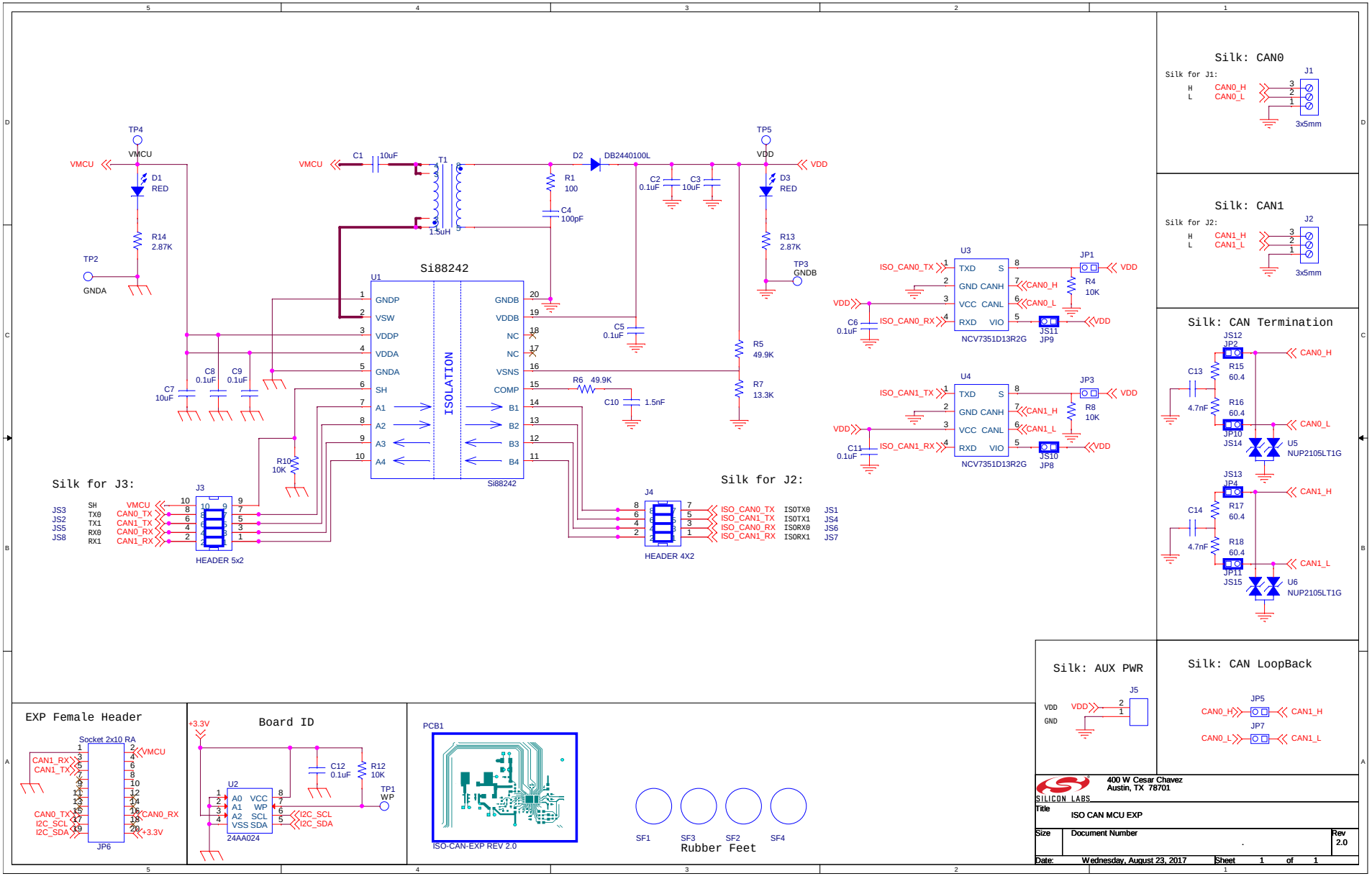

SILICON LABS
400 W Cesar Chavez
Austin, TX 78701

Title: ISO CAN MCU EXP

Size	Document Number	Rev
	.	2.0

Date: Wednesday, August 23, 2017 Sheet 1 of 1