PART NO.	ENG. NO.	LENGTH
848548021	84854-8021	0.5M
848548022	84854-8022	1.0M
848548023	84854-8023	2.0M
848548024	84854-8024	3.0M
848548025	84854-8025	4.0M
848548026	84854-8026	5.0M
848548027	84854-8027	6.0M
848548032	84854-8032	1.0FT
848548033	84854-8033	3.0FT
848548034	84854-8034	4.0FT
848548035	84854-8035	9.0FT
848548036	84854-8036	10.0M

CABLE LENGTH TOLERANCES
>.3M [1FT]: +19mm-0 [+.75in-0]
.3 - .9M [1 - 3FT]: +44.5mm-0 [+1.75in-0]
.9 - 1.8M [3 - 6FT]: +55.6mm-0 [+2.19in-0]
1.8 - 3.7M [6 - 12FT: +88.9mm-0 [+3.50in-0]
3.7 - 7.3M [12 - 24FT]: +165.1mm-0 [+6.50in-0]
7.3-14.6M [24 - 48FT]: +317.5mm-0 [+12.50in-0]
14.6 - 30.5M [48-100FT]: +622.3mm-0 [+24.50in-0]
OVER 30M [100FT] +2% OF FINISHED LENGTH

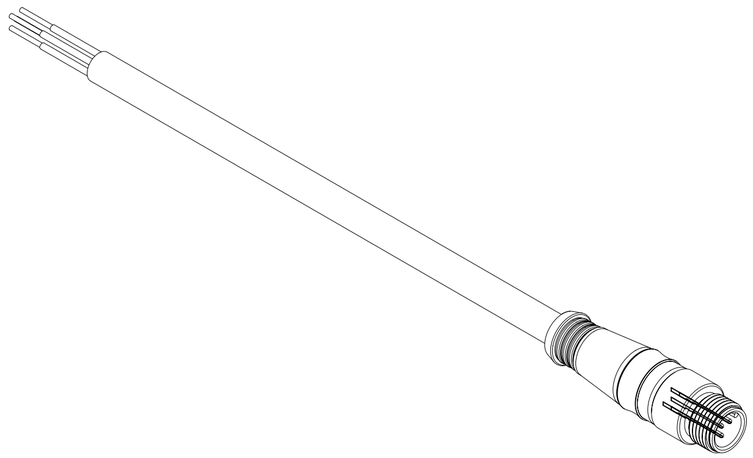

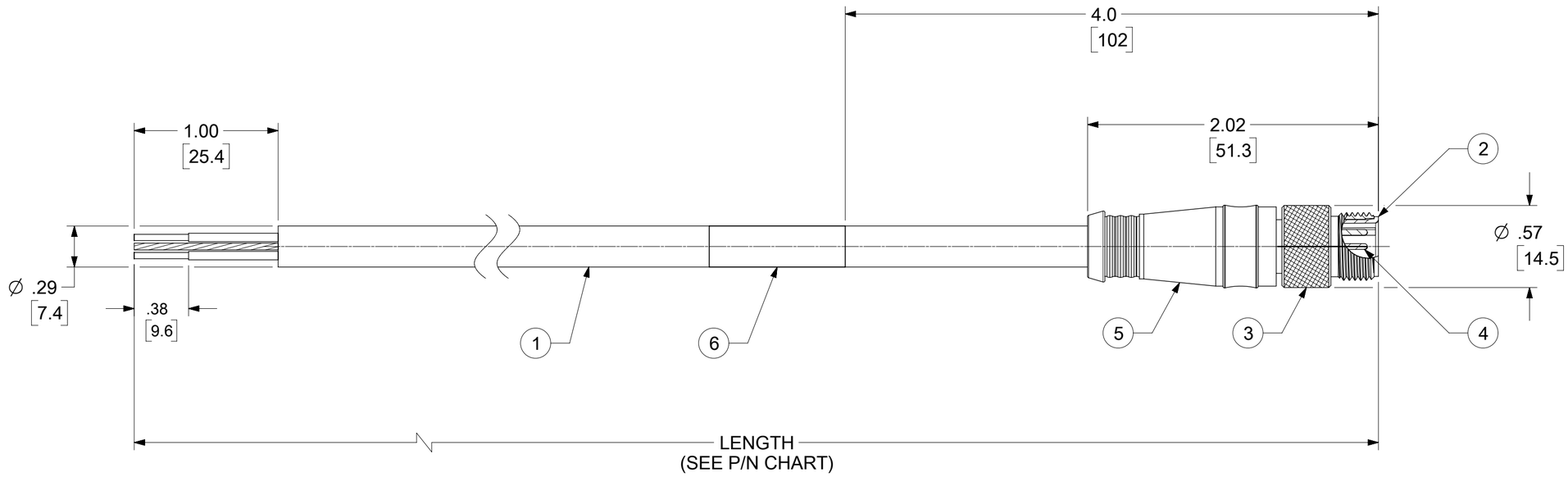

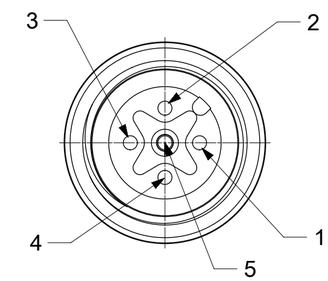

MALE FACE VIEW

NOTES:
1. MATERIAL: AS NOTED
2. FINISH: AS NOTED
3. ELECTRICAL:
   VOLTAGE: 250V
   CURRENT: 4A
4. TEMP RATING: -20°TO +80°C
5. PROTECTION: IP67 (WHEN MATED)
6. COUPLING THREAD: M12 X 1.0
7. ALL DIMS ARE FOR REFERENCE UNLESS TOLERANCED OR NOTED OTHERWISE

MALE

DRAIN	1
RED +V	2
BLACK-V	3
WHITE CAN H	4
BLUE CAN L	5

WIRE DIAGRAM

ITEM	DESCRIPTION	MATERIAL	FINISH
6	WRAP LABEL	VINYL	BLACK/YELLOW
5	OVERMOLD	TPC (C)	GRAY
4	CONTACT PINS	Cu ALLOY	GOLD PLATED
3	COUPLING, MALE THREAD	BRASS	NICKEL PLATED
2	I NSULATOR, 5P, MALE	NYLON	BLACK
1	CABLE, DEV-NET, 22AWG	PVC	GRAY

DOCUMENT STATUS	P1	RELEASE DATE	2020/01/30 19:05:33

SYMBOLS: FA = 0, FC = 0, FP = 0, S = 0, ▼ = 0, C = 0, ☒ = 0, ■ = 0, C = 0

THIS DRAWING CONTAINS INFORMATION THAT IS PROPRIETARY TO MOLEX ELECTRONIC TECHNOLOGIES, LLC AND SHOULD NOT BE USED WITHOUT WRITTEN PERMISSION

DIMENSION UNITS: INCH/MM
SCALE: 1.5:1

GENERAL TOLERANCES (UNLESS SPECIFIED)

	MM	INCH
4 PLACES	±	±
3 PLACES	±	±
2 PLACES	±	±
1 PLACE	±	±
0 PLACES	±	±
ANGULAR TOL	±	°

DRAFT WHERE APPLICABLE MUST REMAIN WITHIN DIMENSIONS

CURRENT REV DESC: REDRAWN TO NX, O-MOLD WAS PVC

EC NO: 630978
DRWN: RSTONE 2020/01/21
CHK'D: ALEON01 2020/01/27
APPR: BWOODMAN 2020/01/30

INITIAL REVISION:
DRWN: RSTONE 2007/08/20
APPR: JMACNEIL 2007/09/24

THIRD ANGLE PROJECTION | DRAWING: C-SIZE | SERIES: 84854

molex

MICRO-CHANGE CORD ASSEMBLY
MALE, 5P, M12, 22AWG, NMEA

PRODUCT CUSTOMER DRAWING

DOCUMENT NUMBER	DOC TYPE	DOC PART	REVISION
SD-84854-018	PSD	001	C

MATERIAL NUMBER	CUSTOMER	SHEET NUMBER
SEE P/N CHART	GENERAL MARKET	1 OF 1

FORMAT: Eng-legs-master-tb-prod-C
REVISION: D
DATE: 2018/01/18