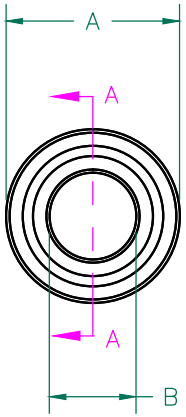

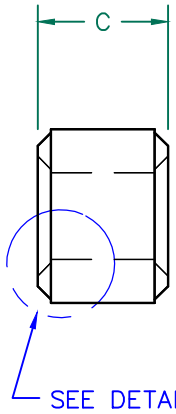

SECTION A–A

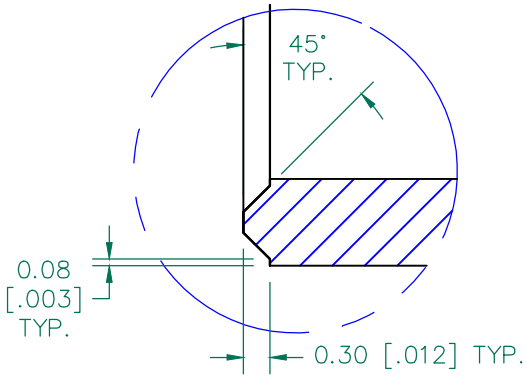

DETAIL A
SCALE: 12:1

IMPEDANCE (Z)			
Frequency	25 MHz	100 MHz	300 MHz
Nominal (REF)	25 Ω	70 Ω	179 Ω
Minimum	- Ω	56 Ω	- Ω

Z vs. FREQUENCY
(REF. ONLY)

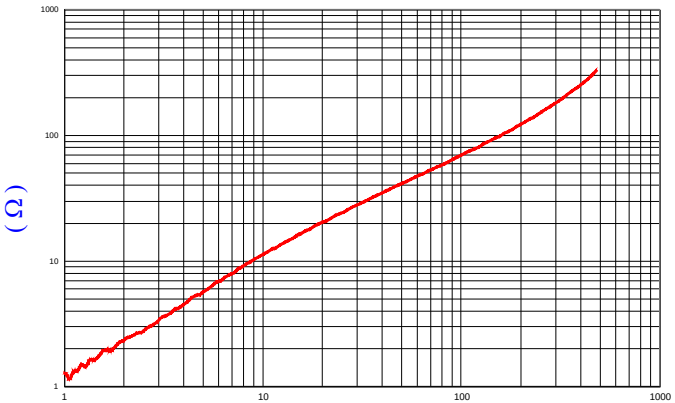

AGILENT E4991A Impedance/Material Analyzer
HP 16092A Test FixtureTEST REF. 6223

FERRITE CORE DIMENSIONS (SPEC): mm [in]

A	4.00 [.157]	±	0.20 [.008]
B	2.00 [.079]	±	0.20 [.008]
C	3.00 [.118]	±	0.30 [.012]

WEIGHT/1000 0.14 kgs 0.31 lbs

NOTES: UNLESS OTHERWISE SPECIFIED

1. COSMETIC SPECIFICATION REFER TO WI–QA–038.

SCALE DRAWING 1:1

28B0157–500

DIMENSIONS ARE IN mm .

REV	DESCRIPTION	DATE	INT
A	NEW RELEASE	01/24/19	Jcai

This print is the property of Laird Tech. and is loaned in confidence subject to return upon request and with the understanding that no copies shall be made without the written consent of Laird Tech. All rights to design or invention are reserved.

Laird

PROJECT/PART NUMBER:	REV	PART TYPE:	DRAWN BY:
28B0157–500	A	FERRITE CORE	Jcai

DATE:	SCALE:	SHEET:
01/24/19	6 : 1	Ferrite

CAD #	TOOL #
28B0157–500–A	B0157