© – TE Connectivity. All Rights Reserved.

REVISIONS					
P	LTR	DESCRIPTION	DATE	DWN	APVD
	Y	REVISED PER ECO-21-006554	6-14-21	CT	RL

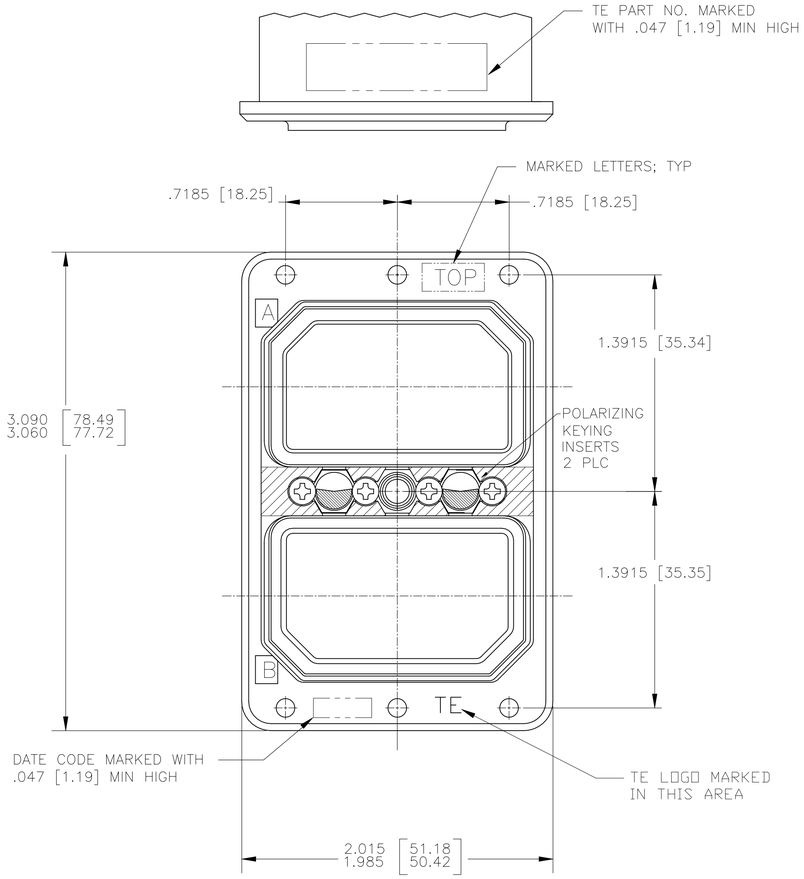

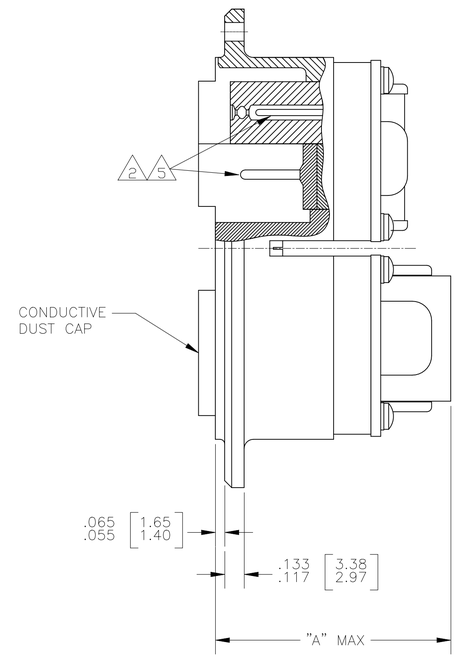

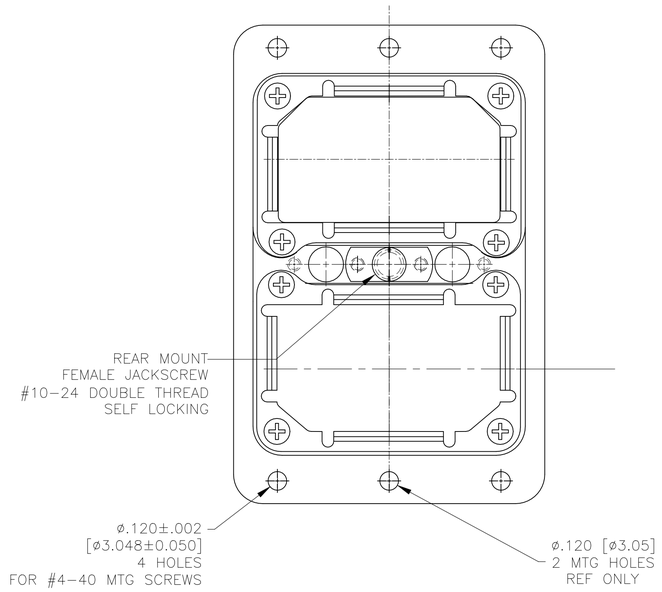

	INSERT ARRANGEMENT			
	26	32C2	67	106
"A" MAX	1.525 [38.74]	1.700 [43.18]	1.525 [38.74]	1.279 [32.49]

1. MATERIAL AND FINISH
   SHELL: DIE CAST ALUM. ALLOY PER FED SPEC QQ-A-591 OR ASTM B211 6061/6511 OR ASTM B209 2024-T4/T351.
   FINISH: TYPE II CADMIUM PLATE (YELLOW) PER QQ-P-416
   INSULATOR HARD: EPOXY PER MIL-M-24325; SOFT: SILICONE RUBBER
   GROMMET PROTECTORS: ALUM. ALLOY, FINISH: BLUE EPOXY
   POLARIZING KEYING INSERTS & SCREWS: STAINLESS STEEL
   FEMALE JACKSCREW: STAINLESS STEEL
   SCREWS & WASHERS: STEEL. FINISH: CAD. PLATED PER QQ-P-416
   DUST CAPS: CONDUCTIVE BLACK THERMOPLASTIC

2. CONTACTS SHOWN IN POSITION FOR ILLUSTRATION ONLY, ARE INCLUDED IN A CONTAINER WITHIN CONNECTOR PACKAGE FOR SHIPMENT, EXCEPT P/N'S 1-207595-2 THRU 2-207595-1

3. CONNECTOR MEETS AMP PRODUCT SPEC 108-10, 019

4. COAX CONTACTS & SEALING BOOTS MUST BE ORDERED SEPARATELY

6. ALL METRIC DIMENSIONS ARE SHOWN IN PARENTHESIS

7. FOR MATING CONNECTOR SEE 207596

8. CONNECTORS ORDERED LESS CONTACTS WILL BE MARKED WITH SAME P/N AS CONNECTORS ORDERED WITH CONTACTS

	PART NO.	ARRANGEMENT		PART NO (8) LESS CONTACTS	
		MODULE A	MODULE B		
	207595-1	106P	67S	1-207595-2	OBSOLETE
	207595-2	106P	26S	1-207595-3	OBSOLETE
OBSOLETE	207595-3	106P	106P	1-207595-4	OBSOLETE
OBSOLETE	207595-4	106P	106S	1-207595-5	OBSOLETE
	207595-5	106S	106S	1-207595-6	OBSOLETE
OBSOLETE	207595-6	106S	26P	1-207595-7	OBSOLETE
OBSOLETE	207595-7	106S	67P	1-207595-8	OBSOLETE
OBSOLETE	207595-8	67S	67S	1-207595-9	OBSOLETE
	207595-9	106S	32C2P	2-207595-0	OBSOLETE
OBSOLETE	1-207595-0	106P	32C2S	2-207595-1	OBSOLETE
OBSOLETE	1-207595-1	NO INSERT	NO INSERT	–	

THIS DRAWING IS A CONTROLLED DOCUMENT.

DIMENSIONS: INCHES (5)

TOLERANCES UNLESS OTHERWISE SPECIFIED:
0 PLC ± –
1 PLC ± –
2 PLC ± –
3 PLC ± .010
4 PLC ± .0050
ANGLES ± –

MATERIAL –
FINISH –

DWN C.C.THOMAS 21MAR02
CHK J.MARKEY 3-25-02
APVD J.MARKEY 3-25-02
PRODUCT SPEC –
APPLICATION SPEC –
WEIGHT 0.000000
CUSTOMER DRAWING

TE Connectivity

NAME RECEPTACLE CONNECTOR INSTALLATION (WITH CENTER FEMALE JACKSCREW)

SIZE	CAGE CODE	DRAWING NO	RESTRICTED TO
A1	00779	C-207595	–

SCALE 2:1 SHEET 1 OF 1 REV Y

4805 (1/15)