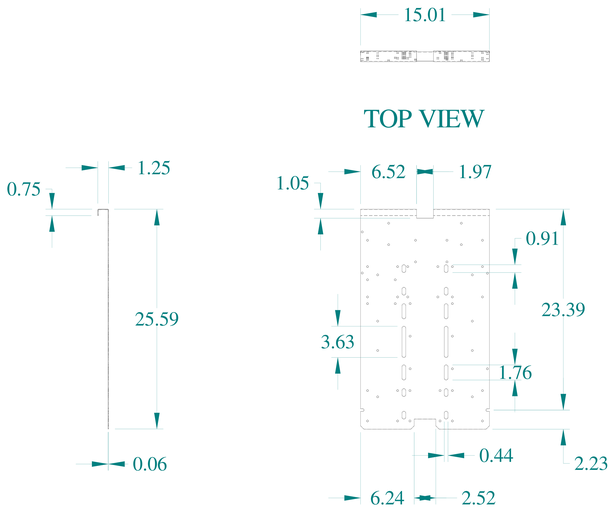


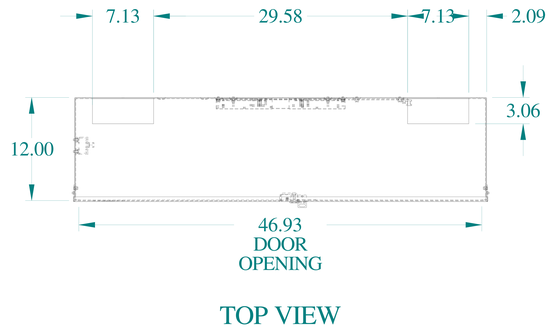


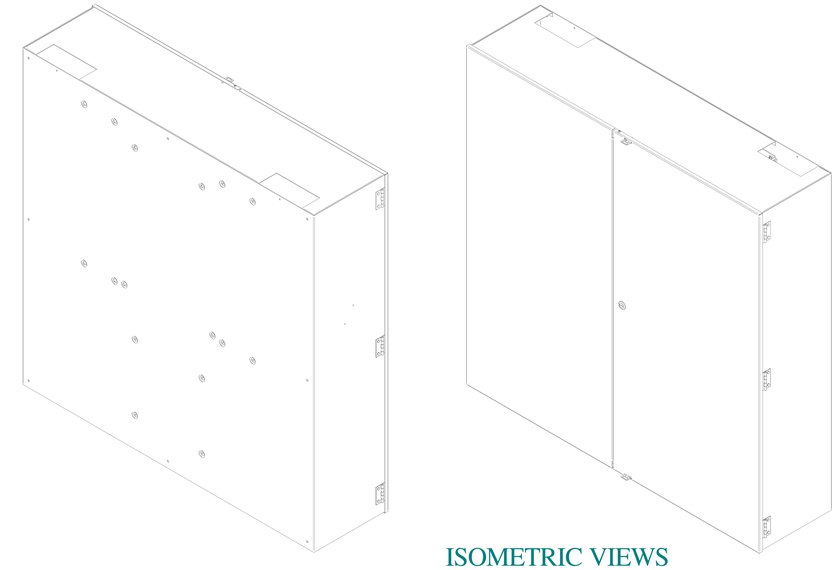


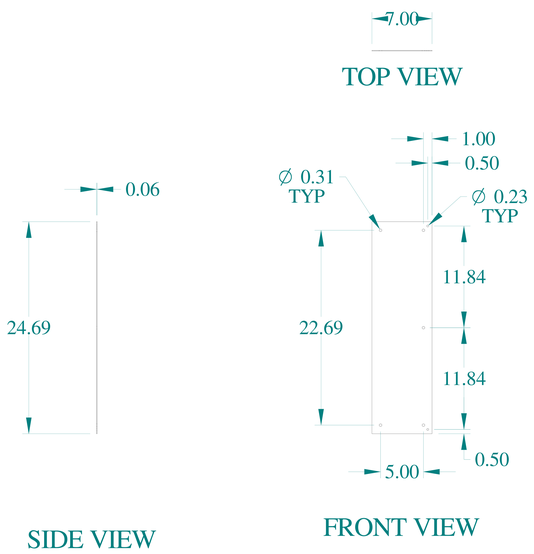


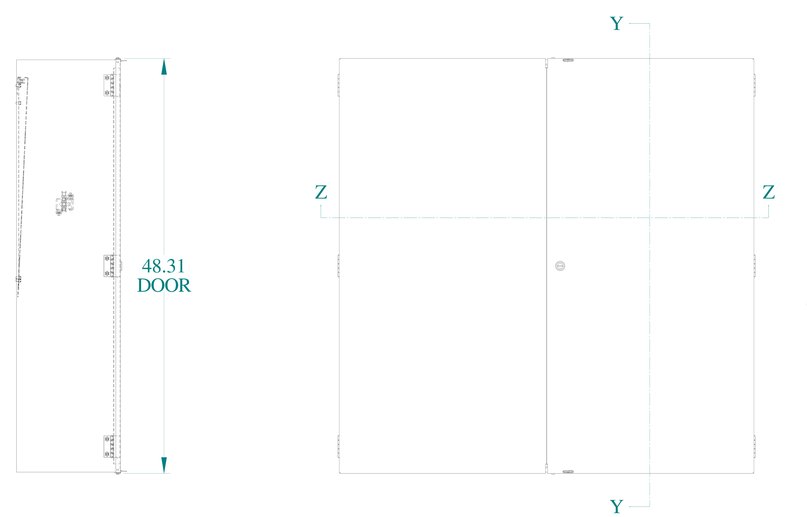


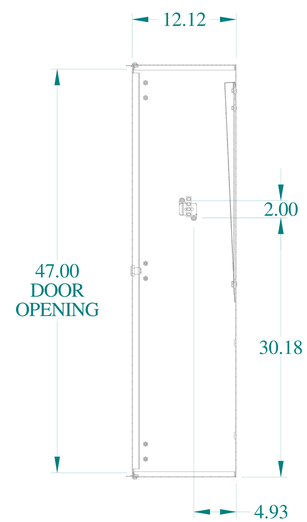


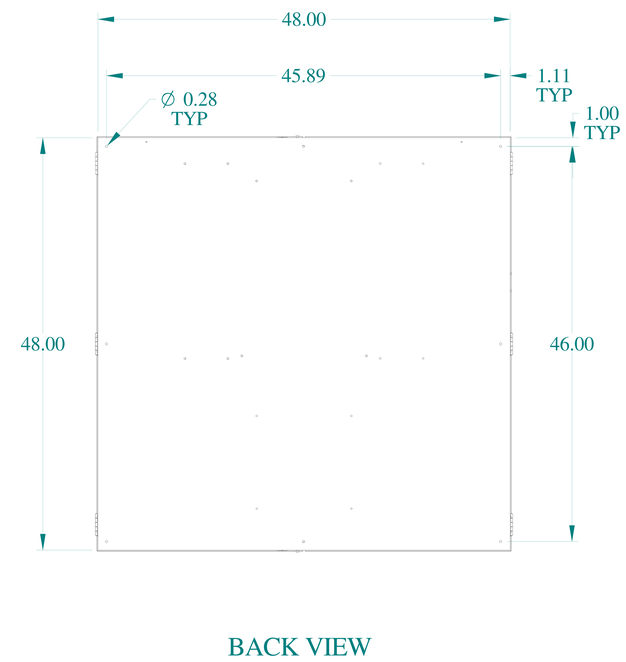


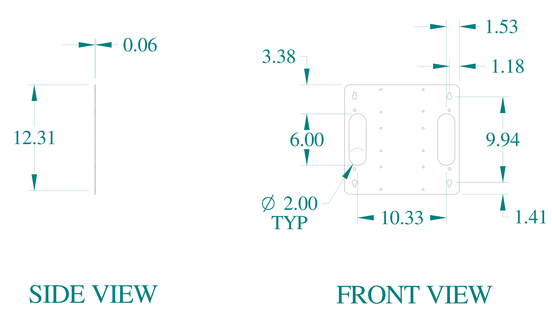


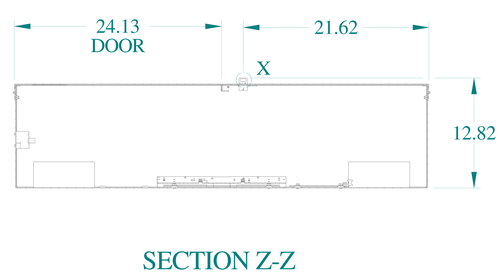


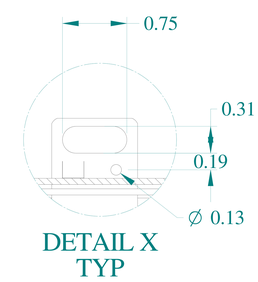


HAMMOND MANUFACTURING®

www.hammondmfg.com

Data subject to change without notice.

| | |
|---|---|
| Part # : CMCQ484812 | Date : Mar. 23, 2019 |

Link:www.hammfg.com/CMCQ484812