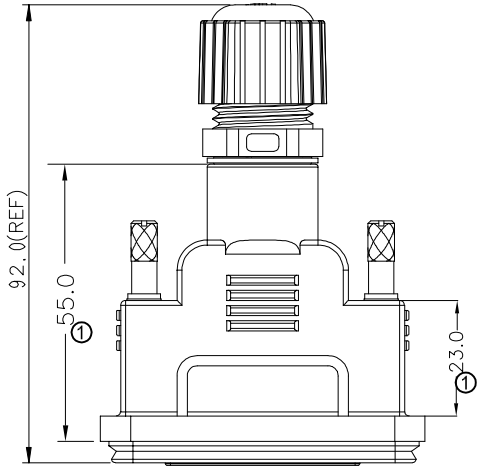


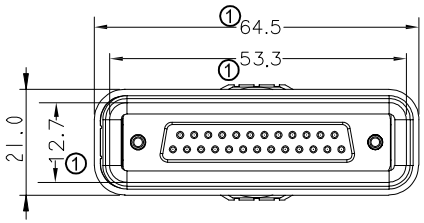


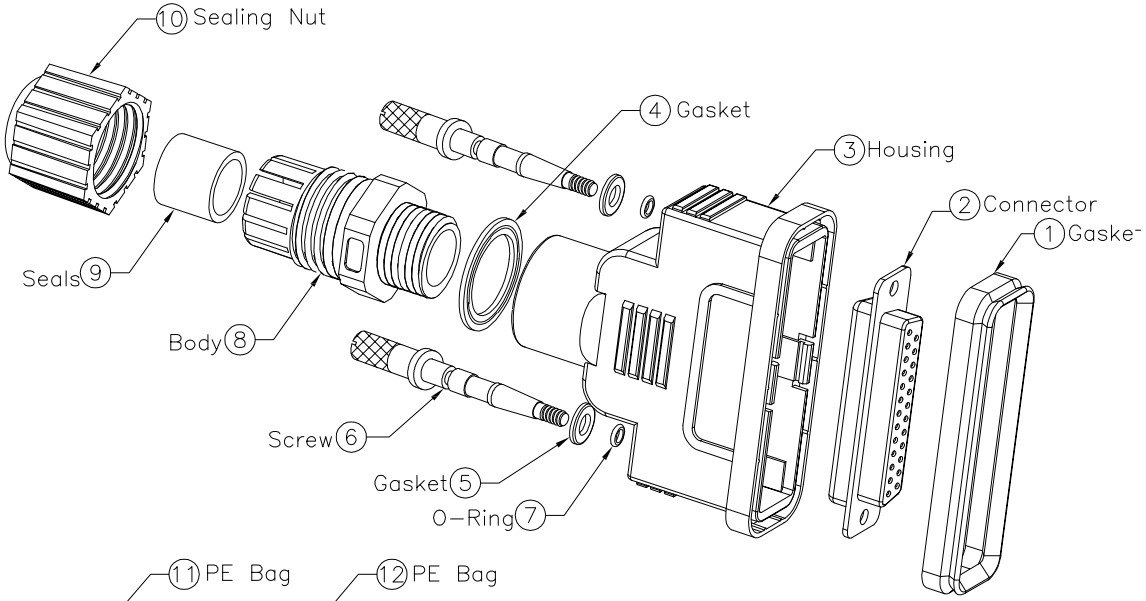


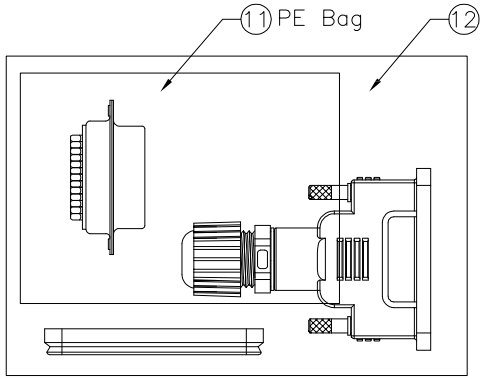


NOTES:
1. Waterproof rate: IP67
2. Gasket: EPDM Black
3. Housing: ABS Black
4. Screw: Brass
5. O-ring: Silicone Clear
6. Body: Nylon Black
7. Sealing Nut: Nylon Black
8. Connector: D-Sub 25Pin Female, pin in full gold plated①
9. Seals for Cable OD:ϕ6.0mm-ϕ10.0mm
10. One Set Unassembled in One Zipper Bag

**RoHS compliant**
**Unit: mm**

| | | | | | | | | |
|---|---|---|---|---|---|---|---|---|
| Scale | Free | | | | | Date | Name | Customer-No. |
| TOLERANCE | | | | | Drawn | 22.04.2014 | Joanna | |
| | | | | | Approved | 03.04.2018 | Amy | ASSMANN WSW-No. A-DF25-HOOD-WP |
| UNIT | ±0.5 | | | | | | | |
| DIM | TOL | ① | Cancel "A" logo&correct dimensions | 03.04.2018 | Amy | | | Drawing-No. ASS 6257 CO rev01 |
| | | ⓪ | Drawn | 22.04.2014 | Joanna | | | |
| Angle | TOL | Id. | Modification | Date | Name | | | Replace / Sheet |

ASSMANN WSW components