| REVISION HISTORY | | | | |
|---|---|---|---|---|
| ECO | REV | DESCRIPTION | APPROVED | DATE |
| — | 1 | PRODUCTION | CUYLER L. | 06-02-14 |

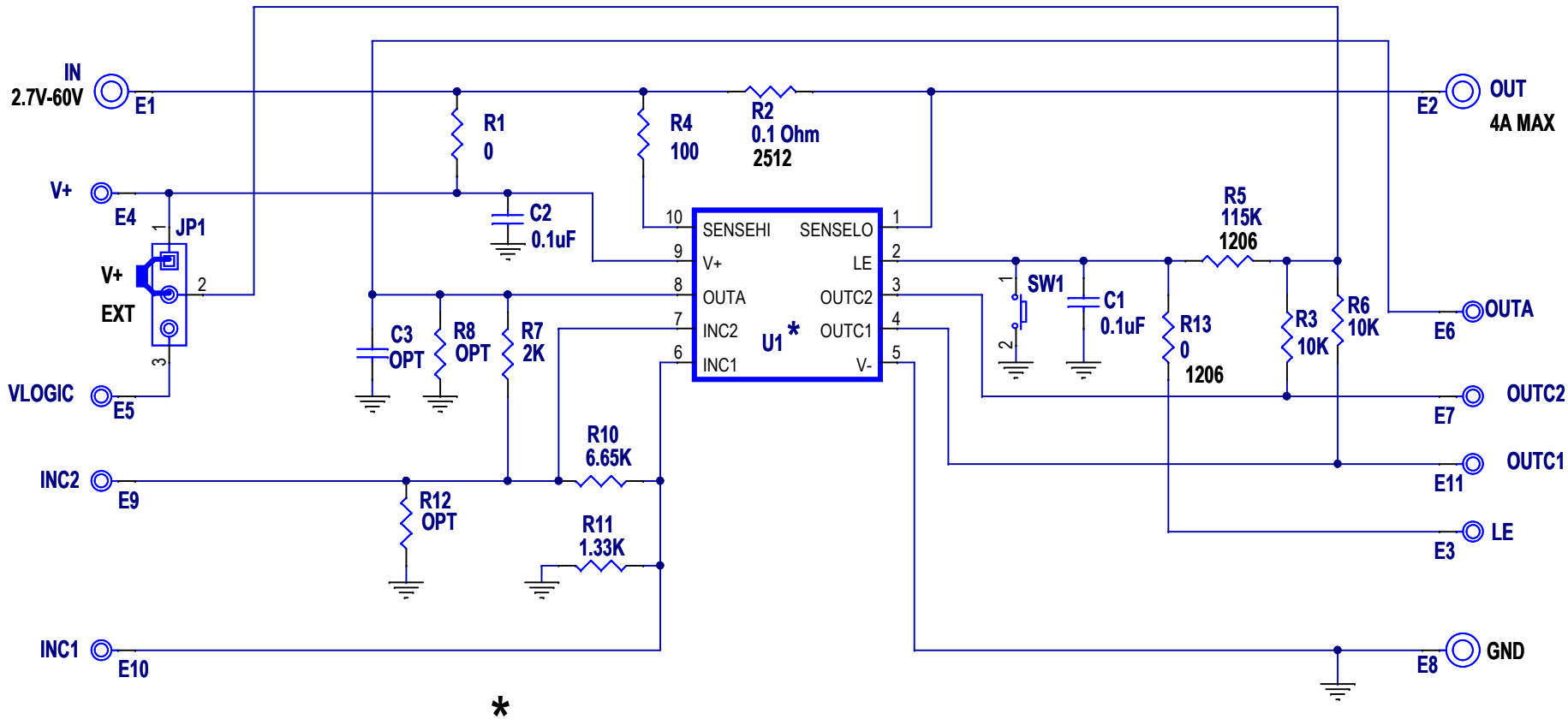


*

| ASSY | U1 |
|---|---|
| -A | LT6119-1 |
| -B | LT6119-2 |

NOTE: UNLESS OTHERWISE SPECIFIED

1. ALL RESISTORS AND CAPACITORS ARE 0603

## CUSTOMER NOTICE

LINEAR TECHNOLOGY HAS MADE A BEST EFFORT TO DESIGN A CIRCUIT THAT MEETS CUSTOMER-SUPPLIED SPECIFICATIONS; HOWEVER, IT REMAINS THE CUSTOMER'S RESPONSIBILITY TO VERIFY PROPER AND RELIABLE OPERATION IN THE ACTUAL APPLICATION. COMPONENT SUBSTITUTION AND PRINTED CIRCUIT BOARD LAYOUT MAY SIGNIFICANTLY AFFECT CIRCUIT PERFORMANCE OR RELIABILITY. CONTACT LINEAR TECHNOLOGY APPLICATIONS ENGINEERING FOR ASSISTANCE.

THIS CIRCUIT IS PROPRIETARY TO LINEAR TECHNOLOGY AND SUPPLIED FOR USE WITH LINEAR TECHNOLOGY PARTS.

| APPROVALS | |
|---|---|
| PCB DES. | AK |
| APP ENG. | CUYLER L. |

SCALE = NONE


LINEAR TECHNOLOGY
1630 McCarthy Blvd.
Milpitas, CA 95035
Phone: (408)432-1900 www.linear.com
Fax: (408)434-0507

LTC Confidential-For Customer Use Only

TITLE: SCHEMATIC

# PRECISION CURRENT SENSE WITH COMPARATORS AND REFERENCE

| SIZE | IC NO. | REV. |
|---|---|---|
| N/A | LT6119IMS<br>DEMO CIRCUIT 2261A | 1 |

DATE: Monday, June 02, 2014

SHEET 1 OF 1