ON Semiconductor®
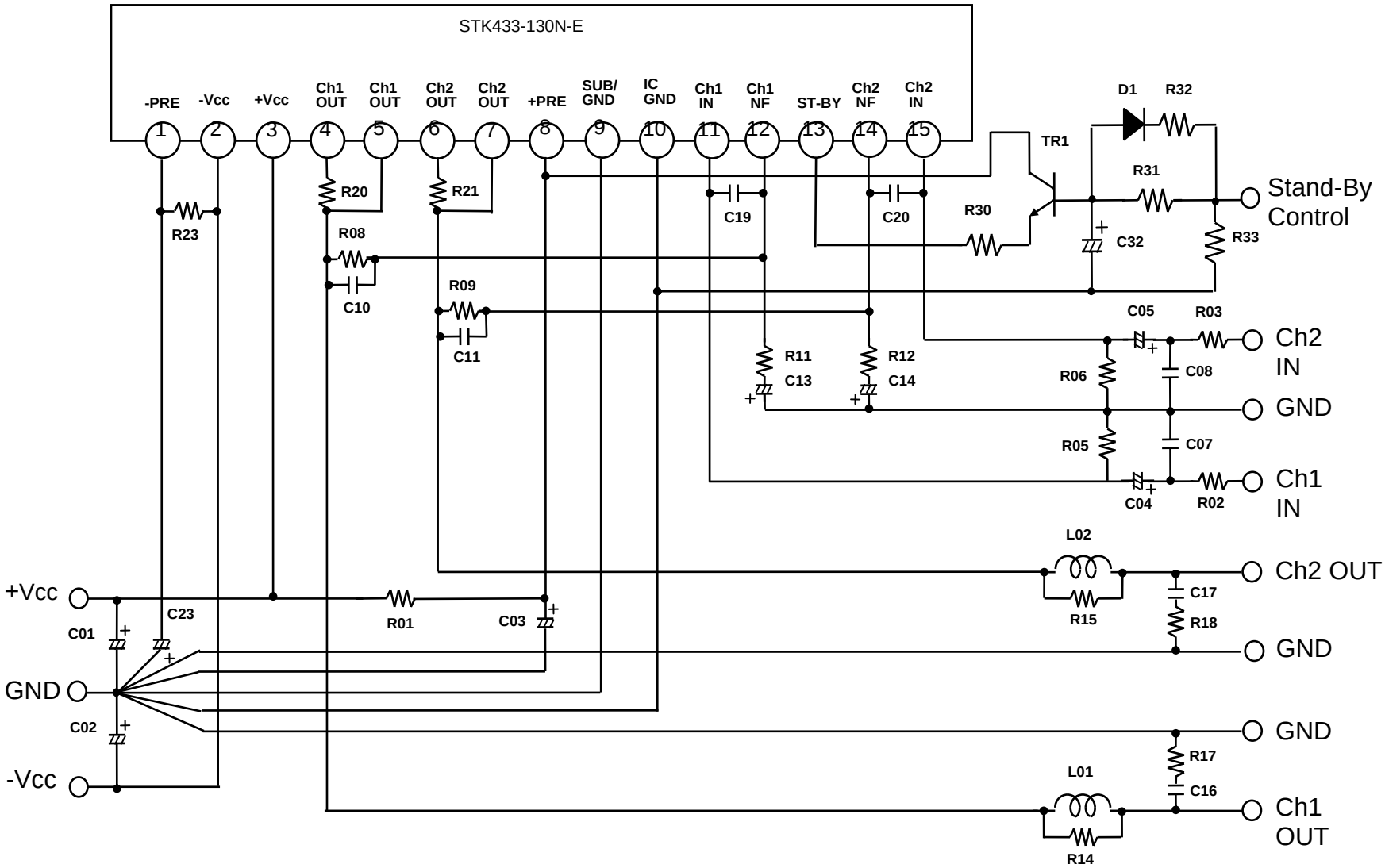
# Schematic for the STK433-130NGEVB Evaluation Board