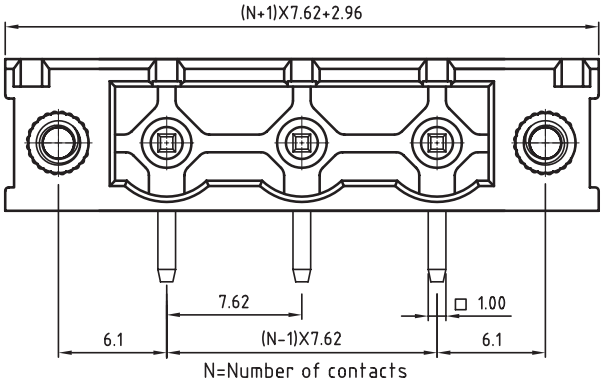

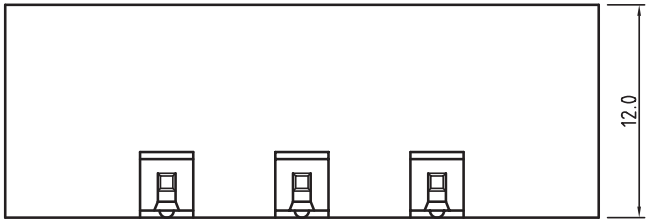

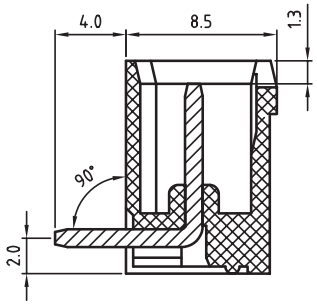

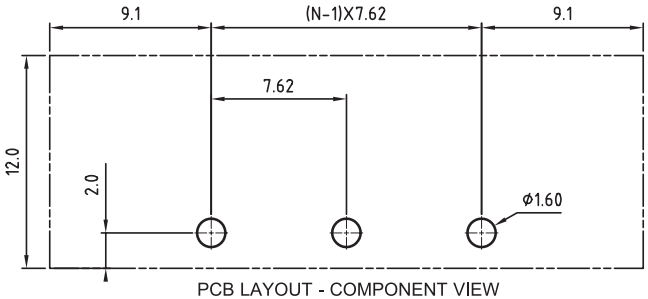

PCB LAYOUT - COMPONENT VIEW

TECHNICAL CHARACTERISTICS

MATERIAL
INSULATOR: PBT
FLAMABILITY RATING: UL94-V0
COLOR: GREEN
CONTACT: BRASS
SOLDER TAIL PLATING: TIN
FLANGES SCREW NUT: BRASS M2.5

ENVIRONMENTAL
OPERATING TEMPERATURE: -40 UP TO 105°C
COMPLIANCE: LEAD FREE AND ROHS

ELECTRICAL	cULus
CURRENT RATING:	20A
WORKING VOLTAGE:	300VAC
WITHSTANDING VOLTAGE:	1.6KV
CONTACT RESISTANCE:	20 mOhm max

STANDARD
cULus CERTIFIED E315414 / MODEL NUMBER 3174

MECHANICAL
PITCH: 7.62MM

SOLDERING: WAVE PROCESS ONLY

PACKAGING: BOX

SERIE 3174

CERTIFICATION

RoHS Compliant

REV	DATE	FILE	BY
G			
F			
E			
D			
C			
B	16-OCT-09	STANDARD	JP
A	05-NOV-08	PDF	JP

PROJECTION:

GENERAL TOLERANCE
.X = +/_ 0.2
.XX = +/_ 0.15

WÜRTH ELEKTRONIK

APPROVAL: RJ

UNIT: MM
SCALE:
SHEET: 1/1
DRAW: MARVIN

DESCRIPTION: SERIE 3174 - 7.62MM CLOSE HORIZONTAL PCB HEADER WITH FLANGES WR-TBL

WERI PART NO: 691 317 410 0xx

SIZE **A4**