THIS DRAWING IS UNPUBLISHED. RELEASED FOR PUBLICATION 20
© COPYRIGHT 20 BY TYCO ELECTRONICS CORPORATION. ALL RIGHTS RESERVED.

PART NUMBER	REV	TERMINATOR	FEED TYPE	DESCRIPTION
1530311-1	1	LEADMAKER	AIR FEED	CUTS CARRIER
1530311-2	1	BENCH	AIR FEED	CUTS CARRIER
1530311-6	1	LEADMAKER	AIR FEED	CONTINUOUS CARRIER
7-1530311-1	1	LEADMAKER	AIR FEED	-1 AND SPARE PARTS
7-1530311-2	1	BENCH	AIR FEED	-2 AND SPARE PARTS
7-1530311-6	1	LEADMAKER	AIR FEED	-6 AND SPARE PARTS
7-1530311-7	1	-	-	SPARE PARTS KIT

CRIMP DATA TE TERMINAL TE CRIMP SPECS

TERMINAL NAME: MAXI POWER TIMER FOR 1.2mm TABS

CRIMP	SIZE	TYPE	RANGE
WIRE	4.57 [.180 IN]	F	$4mm^2$-$6mm^2$
INSUL	6.35 [.250 IN]	F	Ø4.00-5.20mm

WIRE STRIP LENGTH 7.00-7.80mm

APPL INSTRUCTIONS 408-8322 & 408-8490

TERMINAL APPL SPEC 114-18075 - - - FEED 30.00 [1.181 IN]

TERMINALS APPLIED

962930	-	-	-
-	-	-	-
-	-	-	-
-	-	-	-
-	-	-	-

WIRE SIZE	CRIMP HEIGHT *
$6.00mm^2$	3.08 ±0.05 [.121 ±.002 IN]
$5.50mm^2$	3.00 ±0.05 [.118 ±.002 IN]
$5.00mm^2$	2.91 ±0.05 [.115 ±.002 IN]
$4.00mm^2$	2.74 ±0.05 [.108 ±.002 IN]
-	-
-	-
-	-
-	-
-	-
-	-
-	-
-	-
-	-

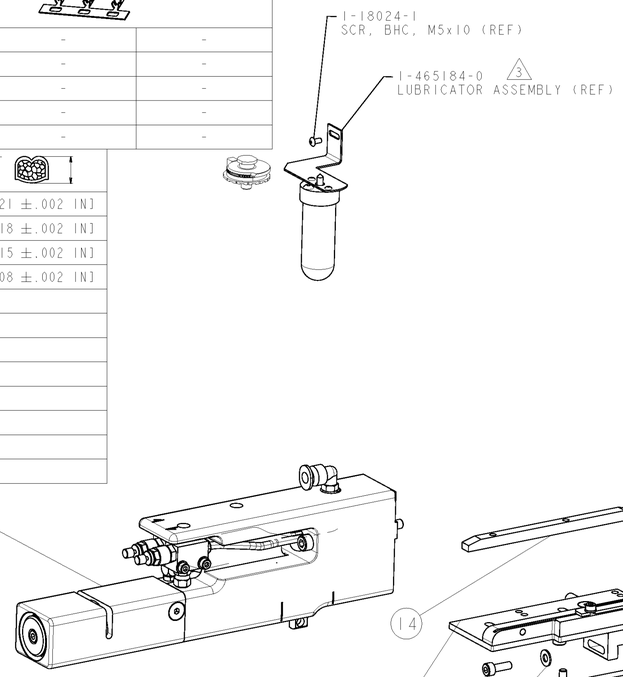

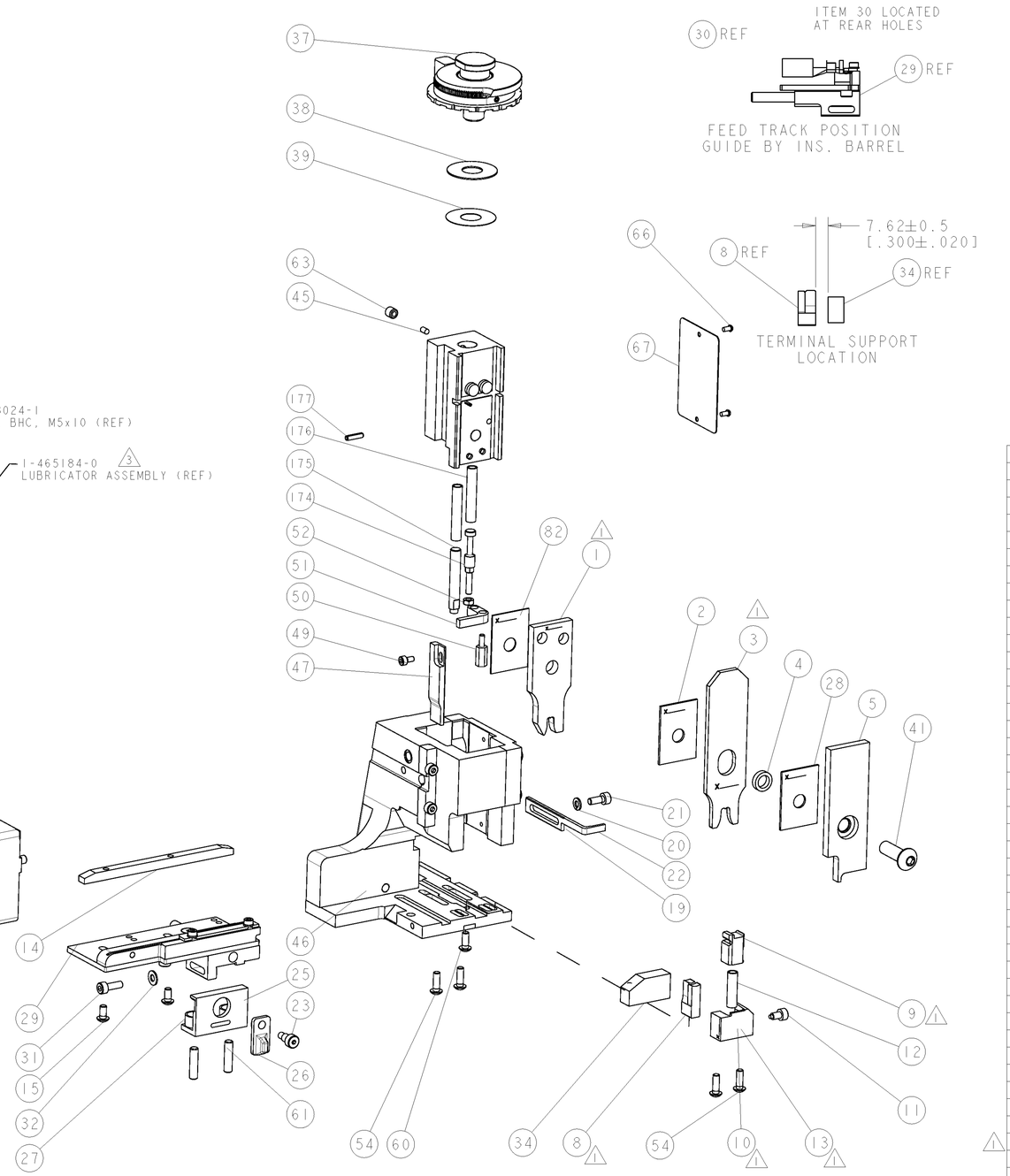

1. RECOMMENDED SPARE PARTS.
2. GREASE RAM, CAM, CAM FOLLOWER AND FEED ROD LIGHTLY.
3. CERTAIN TERMINALS REQUIRE LUBRICATION. REFER TO THE APPLICATOR INSTRUCTION SHEET FOR MORE INFORMATION.
4. LUBRICATE DAILY PER THE APPLICATOR INSTRUCTION SHEET SUPPLIED WITH THE APPLICATOR.

VIEW B ROTATED 30°

AIR FEED 30mm (K) STROKE	AIR FEED 40mm (G) STROKE
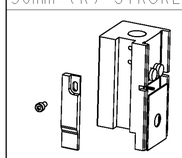	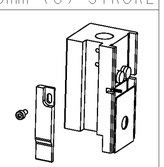

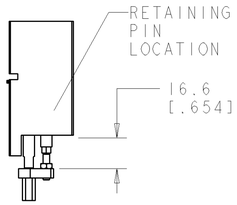

HOLDDOWN SET-UP

PROTOTYPE DESIGN NOT RELEASED FOR PRODUCTION

* WARNING
ON INSTALLATION, SET WIRE DISC TO LARGEST WIRE SIZE SETTING. USE OF SETTINGS BELOW MIN. REQUIRED CRIMP HEIGHT SETTING WILL CAUSE DAMAGE TO CRIMP TOOLING.

SET UP GAGE 458637-3

LOC	DIST
A	66

REVISIONS

P	LTR	DESCRIPTION	DATE	DWN	APVD
	1	PRE-RELEASE	12APR2011	BH	BH

*ITEM 71 IS NOT CORRECT WHEN USING AIRFEED. NEED NEW PART NUMBER. WAITING ON NEW APPL INSTRUCTION SHEET PART NUMBER.

-77	-76	-72	-71	-6	-2	-1	PART NO	DESCRIPTION	ITEM NO
-	1	1	1	1	1	1	2063440-2	AIR FEED MODULE	238
-	1	1	1	1	1	1	993111-8	PIN, SLOTTED SPRING 3.0 X 12.0	177
-	2	2	2	2	2	2	3-22280-7	SPRING, COMPRESSION	176
-	1	1	1	1	1	1	1752353-1	GUIDE PIN,HOLDDOWN	175
-	1	1	1	1	1	1	1901680-1	GUIDE PIN,HOLDDOWN	174
-	1	1	1	1	1	1	455888-6	SPACER, CRIMPER	82
-	1	1	1	1	1	1	1338705-3	DOCUMENTATION PACKAGE	71
-	1	1	1	1	1	1	461264-5	PLATE, IDENTIFICATION	67
-	2	2	2	2	2	2	21017-2	SCREW, DRIVE	66
-	1	1	1	1	1	1	3-18031-0	SCR, SET, CUP POINT M6 X 6.0	63
-	2	2	2	2	2	2	2-18032-5	SCR, SET, FLT POINT M5 X 20.0	61
-	1	1	1	1	1	1	18024-7	SCR, BTN SKT HD CAP (M4 X 10.0)	60
-	4	4	4	4	4	4	18024-8	SCR, BTN SKT HD CAP (M4 X 12.0)	54
-	1	1	1	1	1	1	1-18030-0	NUT, HEX, REG M3.5	52
-	1	1	1	1	1	1	1901681-2	HOLDDOWN, TERMINAL	51
-	1	1	1	1	1	1	3-1752354-3	STANDOFF,HOLD-DOWN	50
-	1	1	1	1	1	1	18023-2	SCR, SKT HD CAP M3 X 6.0	49
-	1	-	1	1	-	1	2063453-1	CAM	47
-	1	1	1	1	1	1	2063968-1	APPL. SUBASSY, SF HDI AIR	46
-	1	1	1	1	1	1	690191-1	PLUG,NYLON	45
-	1	1	1	1	1	1	1633911-2	RAM, (SIDE FEED)	44
-	1	1	1	1	1	1	2-18024-6	SCR, BTN SKT HD CAP (M8 X 25.0)	41
-	1	1	1	1	1	1	690125-1	SHIM SUB-ASSY	39
-	1	1	1	1	1	1	469367-8	SHIM	38
-	1	1	1	1	1	1	879103-2	FINE ADJUST HEAD ASSEMBLY	37
-	1	1	1	1	1	1	1-1752356-0	SUPPORT, TERMINAL	34
-	1	1	1	1	1	1	18027-2	WASHER, FLAT, REG M4	32
-	1	1	1	1	1	1	1-18023-2	SCR, SKT HD CAP M4 X 12.0	31
-	1	1	1	1	1	1	1633073-6	STRIP GUIDE ASSEMBLY	29
-	1	1	1	1	1	1	1-455888-0	SPACER, CRIMPER	28
-	2	2	2	2	2	2	1-22284-0	SPRING, COMPRESSION	27
-	1	1	1	1	1	1	356835-1	LEVER, DRAG RELEASE	26
-	1	1	1	1	1	1	240792-1	DRAG, TERMINAL	25
-	1	1	1	1	1	1	980371-4	SCR, SKT HD SHLDR 5.0 DIA X 6.0	23
-	1	-	1	1	-	1	690472-2	STRIPPER	22
-	1	1	1	1	1	1	1-18023-1	SCR, SKT HD CAP M4 X 10.0	21
-	1	1	1	1	1	1	18025-2	WASHER, SPRG LOCK, REG M4	20
-	-	1	-	-	1	-	690472-1	STRIPPER	19
-	2	2	2	2	2	2	18024-6	SCR, BTN SKT HD CAP (M4 X 8.0)	15
-	1	1	1	1	1	1	1320907-2	FENCE, STRIP GUIDE	14
-	1	-	-	1	-	-	1338684-2	SHEAR HOLDER, FRONT	13
-	1	1	1	1	1	1	3-22280-3	SPRING, COMPRESSION	12
-	1	1	1	1	1	1	356885-5	STOP, SHEAR	11
-	-	1	1	-	1	1	1-1320921-0	SHEAR HOLDER, FRONT, CUT	10
-	1	1	1	1	1	1	454276-5	FLOATING SHEAR, FRONT	9
1	2	2	2	1	1	1	1633711-4	ANVIL, COMBINATION	8
-	-	-	-	-	-	-	-	-	7
-	-	-	-	-	-	-	-	-	6
-	1	1	1	1	1	1	2-455889-1	DEPRESSOR, SHEAR	5
-	1	1	1	1	1	1	238011-2	BLOCK, CRIMPER SPACER	4
1	2	2	2	1	1	1	2-1633511-1	CRIMPER, INSULATION F	3
-	1	1	1	1	1	1	1-455888-1	SPACER, CRIMPER	2
1	2	2	2	1	1	1	1-456412-5	CRIMPER, WIRE .180 F PREMIUM	1

THIS DRAWING IS A CONTROLLED DOCUMENT FOR TYCO ELECTRONICS CORPORATION. IT IS SUBJECT TO CHANGE AND THE CONTROLLING ENGINEERING ORGANIZATION SHOULD BE CONTACTED FOR THE LATEST REVISION.

DIMENSIONS: mm [IN]

TOLERANCES UNLESS OTHERWISE SPECIFIED: 0 PLC ±- 1 PLC ±- 2 PLC ±- 3 PLC ±- 4 PLC ±- ANGLES ±-

MATERIAL - -

FINISH - -

DWN	BOB HIGMAN	20APR2010
CHK	T. ELBIN	20APR2010
APVD	N.DEMING	20APR2010

PRODUCT SPEC -

APPLICATION SPEC See Table

WEIGHT -

Tyco Electronics — Tyco Electronics, Harrisburg, PA 17105-3608

NAME: FINE ADJUST SIDE FEED AIR FEED HDI APPLICATOR -

SIZE	CAGE CODE	DRAWING NO	RESTRICTED TO
A1	00779	C-1530311	-

CUSTOMER ACCESSIBLE PRODUCTION DRAWING — SCALE 3:5 — SHEET 1 OF 1 — REV