ONLY FOR REFERENCE

Standard Spec Sheet

Mitsumi Model Name	SOU-248HNT
Mitsumi Model No.	R 66 7271
Operating Force/ Boss	2.0N / Without
Pcs/Reel	5,000

This specification is only for reference. If you have any questions for the details, please contact SW engineering division.
For your adopting the products, the formal supply specification will be provided.

MITSUMI ELECTRIC CO.,LTD.

2-11-2,Tsurumaki,Tama-shi.Tokyo 206-8657 Japan.

SWITCH ENGINEERING SECTION
1049,Tateiwa,Iizuka-shi. Fukuoka 820-8533 Japan.

整理番号/File No.	製品仕様書 Specification	承認/Approved	検認/Checked	担当/Drawn
7271 00	Side Click Type Tactile Switches SOU-248HNT	SW技術課 '10.06.24. 寺下	SW技術課 '10.06.24. 川口	SW技術課 '10.06.24. 菊池

御得意先名 Customer's Name	御得意先品番 Customer's Parts No.	製品規格 General Specification	Issued
——	——	S66-1531	'10.06.24

RoHS Compliant

1) 本仕様書に規定された項目は、製品規格に優先する。
2) 本仕様書に規定されていない項目は、製品規格を適用する。
3) 基台色：緑

1) The items stipulated in this specification are prior to the "General Specification".
2) When not stipulated in this specification the items "General Specification" are applied.
3) Base color:Green

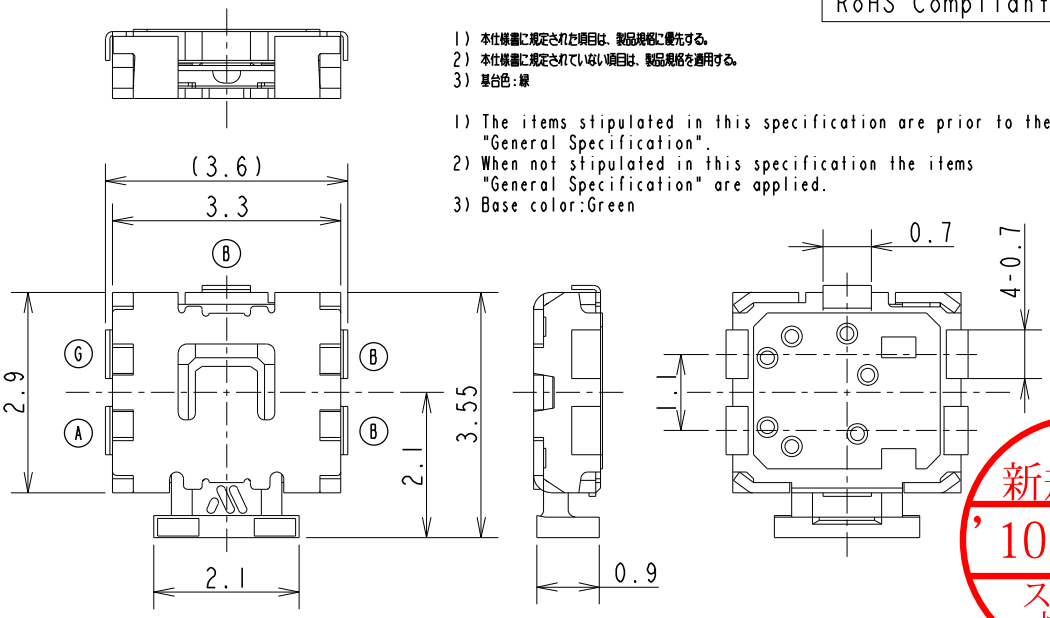

新規出図
'10.06.28
スイッチ技術課

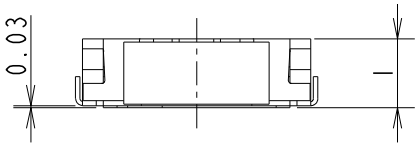

参考ランド形状
Reference land dimension

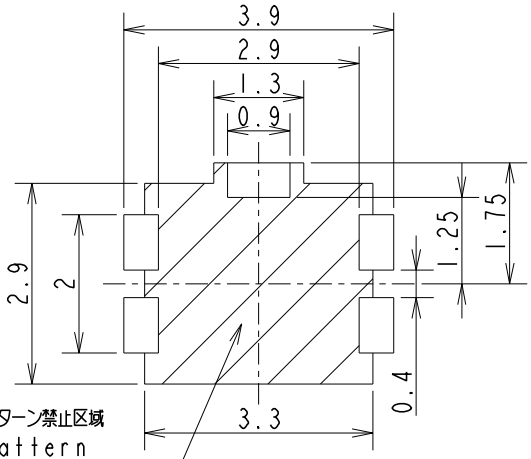

Operating force	2.0±0.7 [N]
Return force	0.2 [N] Min
Travel	0.2±0.1 [mm]
Contact Resistance	1.0 [Ω] Max

Circuit Diagram

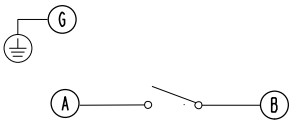

ハッチング部はパターン禁止区域
Do not pattern on hatching area.

メタルマスク厚：100μm
Metal Mask thickness:100μm

Ⓖ端子はカバーとの接触を保証するものではありませんが、
設計上カバーとの絶縁距離を最短にし、グランド端子として御利用頂けるようにしております。
It is not guaranteed that an electrical contact between Ⓖ terminal and cover.
But an insulation distance between them is designed to be shortest.
So, Ⓖ terminal can be used as an ground terminal.

環境区分	G
該非判定結果	N
開発区分 Development Class	2

来歴 Revision				第三角法 Third Angle Projection	尺度 Scale	一般許容差 Tolerance	組立図 Assembly Drwg No.
					10.000	±0.15	66-9712D

品質保証工程図 Product.Manual	検査標準書 Inspect.Manual	機種コード Model Code	記号 Code	部門コード Indent.No.	整理番号 File No.
Q66-0642	166-8428	9260	R	66	7271 00

1531	General Specification Side Click Type Tactile Switch SOU-248 Series	APPROVED Jun.24.'10 SW Terashita	CHECKED Jun.24.'10 SW Kawaguchi	WRITTEN Jun.24.'10 SW Kikuchi
		Issued Jun.24th.2010		

1. GENERAL SCOPE

1-1 THE SCOPE OF APPLICATION

This specification covers the general requirements of mechanical and electrical characteristics of Side Click Type Tactile Switch mainly used as signal switch of electric devices.

1-2 TEST CONDITIONS

Tests and measurements shall be made in the following standard conditions unless otherwise specified.

Normal temperature : 5 to 35°C

Normal humidity: Relative humidity 45 to 85%

In case any question arises from the judgment made, tests shall be conducted the following conditions.

Temperature : 20+/-2°C, Humidity: 65 +/- 5%

2. APPEARANCE AND CONSTRUCTION

2-1 Outer dimensions: Refer to the attached drawing.

2-2 Materials: As shown in Table-1.

2-3 Appearance: There should be no critical crack, scratch, dirt, discoloration and contamination which affect the functional characteristics of the switch. If these problems don't affect the characteristics, the switch can be judged as a good one.

* There may be rare occasions when any substance such as a white stain attaches to the top of cover, but this substance is a constituent of quick-drying grease which doesn't affect the performance of switch.

2-4 Cross section

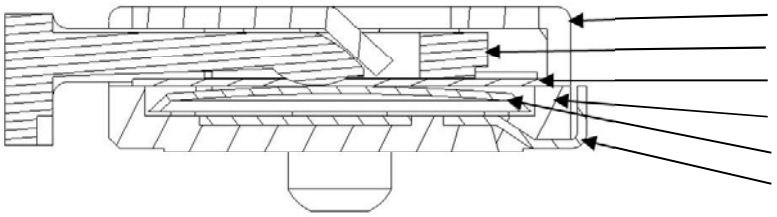

Table-1

Part Name	Material	Remarks
(1) Cover	SUS	
(2) Slider	Nylon	
(3) Cover Tape	Polyimide	
(4) Switch base	Nylon	
(5) Spring	φ2.4 mm, SUS	Ni + Ag
(6) Terminal	Phosphor bronze	Ag △2

3. RATING

Maximum ratings 50mA, 12V D.C. (Resistive load)

ISSUED 31.Mar 2015 SWITCH ENGINEERING DEPT.

Revision				
	Mar.13th '15	△3×2	Changed Operating life Spec	Higaki
	Jan.15th,'15	△2×6	P6,Operating temperature range changed. P7,PRECAUTIONS IN USE added. P10,Production site changed.	Tsutsui
	Dec.19th'14	△1×2	P2,Circuit symbol changed. P6,The condition added to Operating temperature range. P7,Manufacturing Section changed.	Tsutsui

Code	ID No.	File No.
S	66	1531 △03

4. ELECTRICAL CHARACTERISTICS

Items	Test conditions	Criteria
4-1 Contact Resistance	Applying a below static load to the center of the stem, measurement shall be made. (1)Depression : 1.5 to 2 times the operating force of the standard center value (2)Measuring method : To be measured with A.C. 1kHz +/- 200Hz (MAX. 20mV, 50mA)	Refer to the attached drawing.
4-2 Insulation Resistance	Measurements shall be made following the test set force below: (1)Test voltage : 100 V DC for 1min. (2)Applied position : Between all terminals, between terminal and cover.	10 M ohm min.
4-3 Withstanding Voltage	Measurements shall be made following the test set force below (1)Test voltage : 100V AC (50/60Hz) for 1min. (2)Leak current : 2mA (3)Applied position : Between all terminals, between terminal and cover.	There shall be no damage and breakdown.
4-4 Bouncing	Lightly striking the center of the knob at a rate encountered in normal use (3 to 4 operations per sec.), bounce shall be tested at "ON" and "OFF". 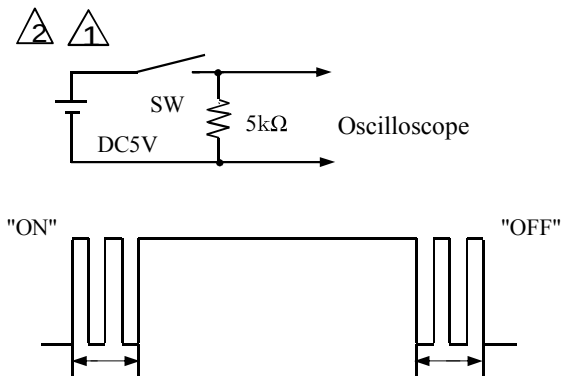 	ON bounce :10ms. Max. OFF bounce:10ms. Max.

ISSUED 31.Mar 2015 SWITCH ENGINEERING DEPT.

File No. **1531**

5. MECHANICAL CHARACTERISTICS

Items	Test conditions	Criteria
5-1 Operating Force	Placing the switch such that the direction of switch operation is vertical and then gradually increasing the load applied to the center of the stem, the maximum load required for the switch to come to a stop shall be measured. The measurement shall be made just after 10 times pushing.	Refer to the attached drawing.
5-2 Return Force	The sample switch is installed such that the direction of switch operation is vertical and, upon depression of the stem in its center the whole travel distance, the force of the stem to return to its free position shall be measured. The measurement shall be made just after 10 times pushing.	Refer to the attached drawing.
5-3 Travel	Placing the switch such that the direction of switch operation is vertical and then applying a static load to the center of the stem, the travel distance for the switch to come to a stop shall be measured. The measurement shall be made just after 10 times pushing.	Refer to the attached drawing.
5-4 Stopper Strength	Placing the switch such that the direction of switch operation is vertical and then a below static load shall be applied in the direction of stem operation. 1) Depression: 30 N 2) Time: 15s 3) Push stick shape: As shown below. 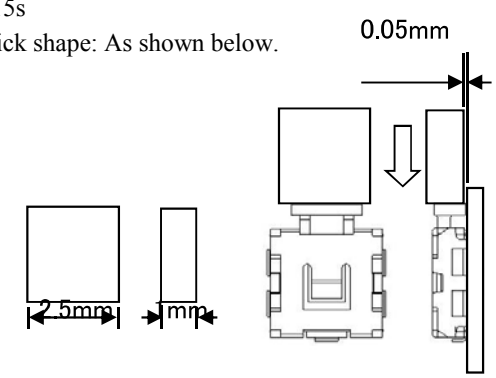	There shall be no sign of damage mechanically and electrically.
5-5 Impact Proof	Measurements shall be made following the test set forth below. 1) Acceleration: 735m/s2 2) Acting time: 6 msec 3) Test direction: 6 directions 4) Cycles of test: 3 cycles per direction (18 cycles in total)	There shall be no sign of damage mechanically and electrically.
5-6 Vibration Resistance	Measurements shall be made following the test set forth below. 1) Range of oscillation: 10 to 55 Hz 2) Amplitude, pk-to-pk: 1.5 mm 3) Cycle of sweep: 10-55-10 Hz in approx. 1minute 4) Mode of sweep: Logarithmically sweep or uniform sweep 5) Direction of oscillation: Three mutually perpendicular directions, including the direction of stem travel 6) Duration of testing: 2 hours each, for a total of 6 hours	There shall be no sign of damage mechanically and electrically.

ISSUED 31.Mar 2015 SWITCH ENGINEERING DEPT.

File No. **1531**

Items	Test conditions	Criteria
5-7 Solderability	Measurements shall be made following the test set force below: 1) Soldering temperature: 230 +/- 5 degrees C 2) Soldering time : 3 +/- 0.5 seconds 3) Solder : Sn-3.0Ag-0.5Cu 4) Soldering flux : Rosin 25%, Alcohol 75%	More than 75% of the dipped part shall be covered with solder.
5-8 Soldering heat Resistance	1) Hand soldering 1-1) Temperature of soldering iron tip: 350 +/- 5 degrees C 1-2) Soldering time: 3 +1/-0 seconds 1-3) The soldering iron should be applied to the terminals. 1-4) Excessive load should not be applied. 1-5) Power of the soldering iron should not exceed 15 W. 2) Reflow soldering 2-1) Heating method: Far-infrared heating 2-2) Temperature-time profile (Maximum value): As shown below. 2-3) Allowable soldering time: 2 times 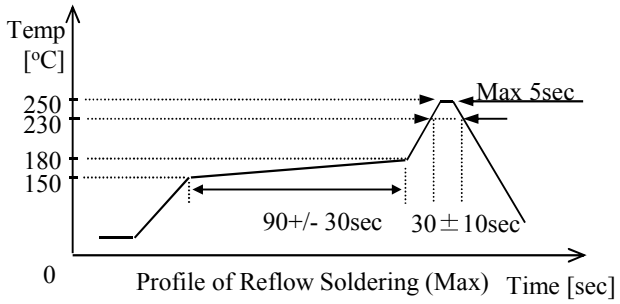 Profile of Reflow Soldering (Max) The condition mentioned above is a temperature on the PWB surface on which parts are mounted. There are cases where board's temperature greatly differs from switch's surface temperature, depending on board's material, size, thickness, etc. Please care, therefore, should be used not to allow switch's surface temperature to exceed 250℃. The above temperature profile is the conditions for heat resistance test. Therefore, conditions of soldering shall be confirmed under actual production conditions.	There shall be no damage on appearance. Electrical performance in Section 4 shall be assured. Operating force (Item 5-1) shall be assured.

ISSUED 31.Mar 2015 SWITCH ENGINEERING DEPT.

5-9 Other precautions for soldering

1) Do not overheat when you solder with soldering iron.
2) Following the soldering process, do no try to clean the switch with a solvent or the like.
3) Safeguard the switch assembly against flux penetration from its top side.
4) As the conditions vary somehow on the kind of reflow soldering equipment, please make sure you have the right one before use.
5) As the click ratio may deteriorate when a high heat load is applied, reflow soldering should be performed in the shortest period and at the lowest temperature possible.
6) Please use the proper amount of solder in order to prevent the flux penetration into the switch.
7) Switch terminals and PWB upper face shall be free from flux prior to soldering.
8) Note that if the load is applied to the terminals during soldering it might cause deformation and defects in electrical performance.

File No. **1531**

6. ENDURANCE

Items	Test conditions	Criteria
6-1 Operating life	Measurements shall be made following the test set forth below : △3 (1) DC12V 50mA resistive load. (2) Rate of operation: 2 operations per second. (3) Depression: : The maximum load of a specification of the operating force. △3 (4) Cycles of operation: 100,000 cycles (5)Pusher : Material SUS, φ4.0 Tip: flat shape	Contact resistance:10ohm max. Insulation resistance:10M-ohm min. Bounce: ON bounce 20 msec max. OFF bounce 20 msec max. Withstanding voltage: Item 4-3 Operating force: -30 to +30% of initial force Travel: Item 5-3

7. ENVIRONMENTAL

Items	Test conditions	Criteria
7-1 Moisture Resistance	After testing at +60+/-3 ℃and 90 to 96% in relative humidity for 96 +/-5 hours, the sample is allowed to stand under normal temperature and humidity conditions within an hour, then, measurement shall be made within an hour. *Water drops shall be removed.	Contact resistance: 1ohm max. Insulation resistance: 10M-ohm min. Bounce: ON bounce 20 msec max. OFF bounce 20 msec max. Withstanding voltage: Item 4-3 Operating force: -30 to +30% of initial force Travel: Item 5-3
7-2 Heat Resistance	After testing at +85+/-3 ℃ for 96 +/-5 hours, the sample is allowed to stand under normal temperature and humidity conditions within an hour, then, measurement shall be made within an hour.	
7-3 Resistance to Low Temperature	After testing at -40+/-3 ℃ for 96 +/-5 hours, the sample is allowed to stand under normal temperature and humidity conditions within an hour, then, measurement shall be made within an hour. *Water drops shall be removed.	
7-4 Temperature Cycling	Following continuous five cycles of the temperature cycling test set forth below: 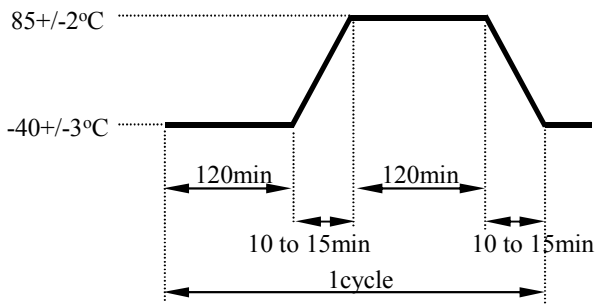 	

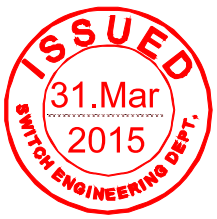

File No. **1531**

8. USE CONDITIONS

8-1 Operating temperature range: -40 to +60°C. No freeze and condensation.
(Temperature range which the switch is electrically ON and OFF.) △1 △2

8-2 Using Environment

1) Do not expose the switch to corrosive gas such as sulfur gas, and salty wind.
2) Visible dust must be cleared.
3) As the switch may deform and change its quality, please do not apply excessive force to the switch.

9. STORAGE CONDITIONS

9-1 Storage temperature: -25 to 85°C. No freeze and condensation.

9-2 Using Environment

1) Do not expose the switch to corrosive gas such as sulfur gas, and salty wind.
2) Visible dust must be cleared.
3) As the switch may deform and change its quality, please do not apply excessive force to the switch.

9-3 Storage Method

1) Store the switches in the following condition: with neither direct sunshine nor corrosive gas and in normal temperature.
2) Do not stack too many switches for strafe. Shall be free from high temperature and high humidity.
3) The operating part of the switch should be free position in storage.

10. PRECAUTIONS IN USE

10-1 Do not clean the switch with a solvent or the like.

10-2 Never use the product beyond the rated current and voltage.

10-3 Do not apply excessive load to the terminals and the operating part.

10-4 Larger stress than specified and/or shock shall not be applied to the operating part.

10-5 The stress shall be not applied to the upper face of the switch.

10-6 The switch will be broken, if you give larger stress than specified while operating. Take most care not to give both upward and downward stress to the switch when you operate it.

10-7 As the switch may be broken, please do no apply a load of more than 5N to the switch bosses.

10-8 After mounting the switches on PWBs, please do not stack too many PWBs in order to avoid excessive load to the switch mounted area.

10-9 The dimensions of a pattern for mounting a printed circuit board shall refer to the recommended dimensions in the outline drawing.

10-10 Use of organic acid flux shall be avoided because it may cause corrosion of the switch. Please make sure the type of flux before you use it.

10-11 As this switch is designed for reflow soldering, if you place it at the edge of PWB for convenience, then flux may get into the sliding part of the switch during automatic dip soldering after being mounted, so do not apply auto dip after being mounted.

10-12 If the switch is given stress from the side, the cover may drop off and it may result in damages to switch functions. Therefore, please handle it with extreme care.

10-13 The operating part should be moved to the appointed position in order to ensure proper operation.

10-14 Do not give stress to the upper face of the switch while operating and use the switch under given stress.

10-15 If you use this product in one of the following environmental conditions, progress of sulfaration and oxidization on the contact part (silver) will be accelerated, which may cause contact failure. Therefore, be careful about the operation environment.

1) Around a sulfarate hot spring where sulfide gas is generated.
2) In case this product is always used in a place where exhaust gas from automobiles exist.

10-16 If you push the edge of the operating part, the switch might not operate properly. Therefore, pressure to the operating part shall be applied to the whole surface equally and avoid the pressured to the specific one portion.

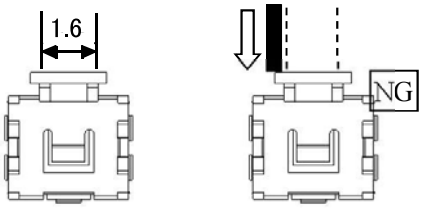

Figure-4

ISSUED 31.Mar 2015 SWITCH ENGINEERING DEPT.

File No. **1531**

10-17 Unless provided for otherwise, the products have been designed and manufactured for application in equipment and devices which are sold to end users in the market, including audio-visual (AV) equipment, electrical home appliances, office machines, information and communication equipment, and amusement equipment.
The products are not intended for use in, and must not be used for, any application for nuclear equipment, driving equipment for aerospace or any other unauthorized use.
With the exception of the abovementioned prohibited applications, please contact our sales representative and/or evaluate the total system regarding applicability for applications involving high levels of safety and liability such as medical equipment, burglar alarm equipment, disaster prevention equipment and undersea equipment.
Please also incorporate fail-safe design, protection and redundant circuitry, malfunction protection, and/or fire protection into the complete system to ensure safety and reliability of the total system.

ISSUED
31.Mar
2015
SWITCH ENGINEERING DEPT.

File No. **1531**

11. MANUFACTURING LOCATION

＜Sales Section＞
MITSUMI ELECTRIC CO.,LTD.
2-11-2 Tsurumaki, Tama-shi, Tokyo, Japan
＜Management Section＞
MITSUMI ELECTRIC CO.,LTD., Kyushu Business Division
1049 Tateiwa, Iizuka-shi, Fukuoka, Japan
＜Manufacturing Section＞ 1
~~QINGDAO MITSUMI ELECTRIC CO.,LTD.~~
~~No.3 Industrial Area, Chang Jiang Road Qingdao Economic & Technical Development Zone,~~
~~Qingdao, The people's Republic of China~~
QINGDAO MITSUMI ELECTRONICS CO.,LTD.
No.2, Dayangzhou Road, Qingdao West Coast Export Processing Zone, Qingdao city,
Shandong Province, People's Republic of China

12. TAPE PACKING SPECIFICATION
12-1 Carrier tape dimensions are shown below.
12-2 Taping Procedure
1) Tape winding direction is in clockwise. (When pulling the tape toward, feeding holes should be located on the right side.)
2) Feeding holes shall not be covered with the cover tape. The cover tape shall not be run off the edge of the carrier tape.
3) 100 to 190 mm from the end of tiller tape part shall be empty and 100 to 140 mm from the end of leader tape part shall be empty. Leader part consists of the part which unstuck with cover-tape (20 to 30 mm) and the cover tape shall be extended 150 to 200 mm.
4) After reeling, stick the leader part of cover tape to the side of the reel with adhesive tape (30 to 50 mm)
5) Peeling strength of cover-tape from carrier-tape is 0.1to 1.3N at 165 to 180deg. angle in reverse.
6) Switch shall be packed in single direction.
7) 5000 switches shall be pack in a reel.
8) The label which indicates our model number, part number, contained quantity and inspection number shall be stuck on the side of the reel.
9) The switch shall drop by itself when it is pushed with a force of 0.1 to 0.2 from the back after peeling the cover tape.

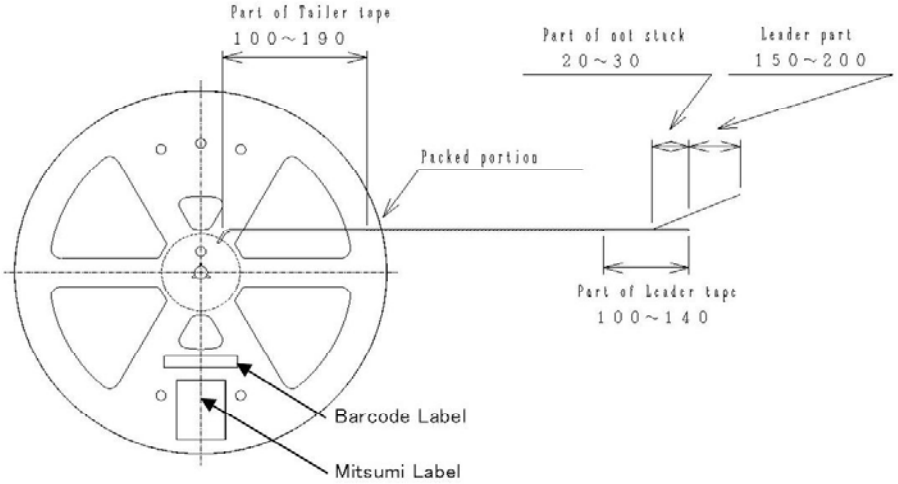

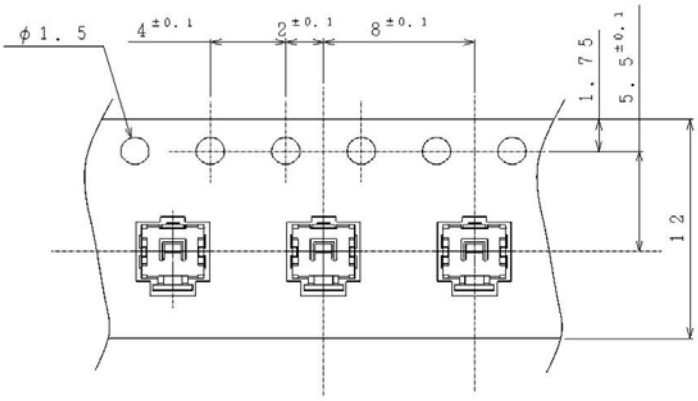

ISSUED 31.Mar 2015 SWITCH ENGINEERING DEPT.

File No. **1531**

13. Packing Specification

1) Inner Package

Reel

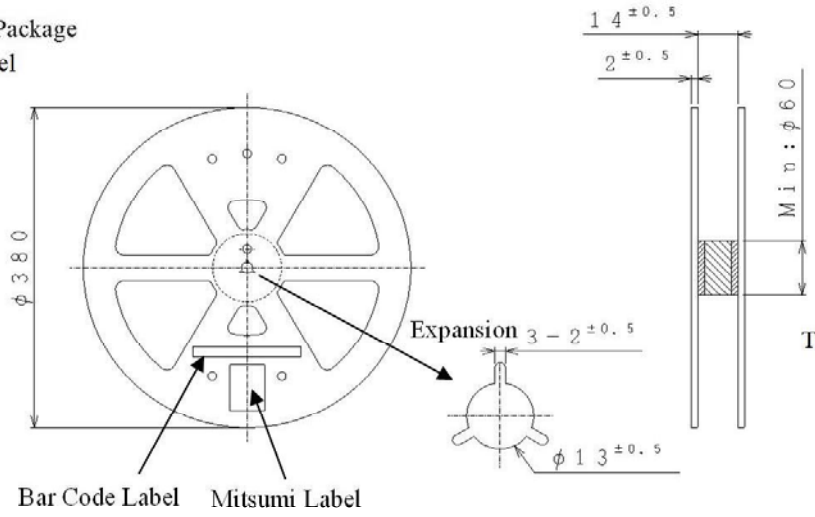

The material of a reel : PS

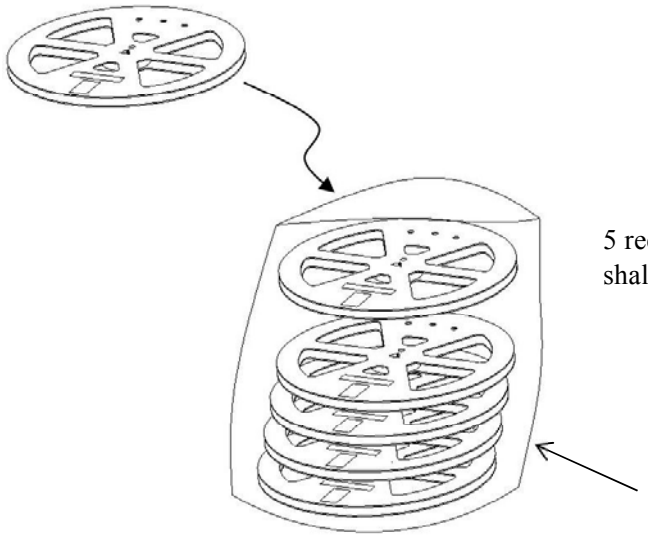

5 reels at maximum
shall be packed in a inner bag.

PE Bag

2) Outer package

Outer Box

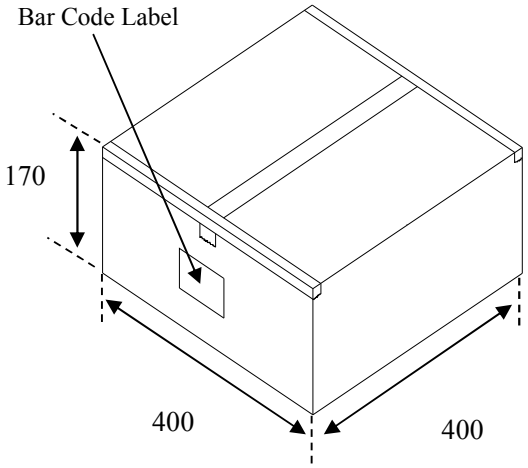

5 reels at maximum
shall be packed in a outer package.

ISSUED 31.Mar 2015 SWITCH ENGINEERING DEPT.

File No.	1531

13. Packing Specification

3) Lavel

Mitsumi Label

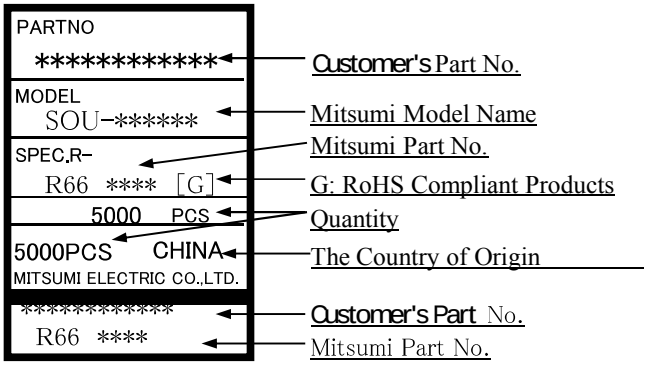

Bar Code Label

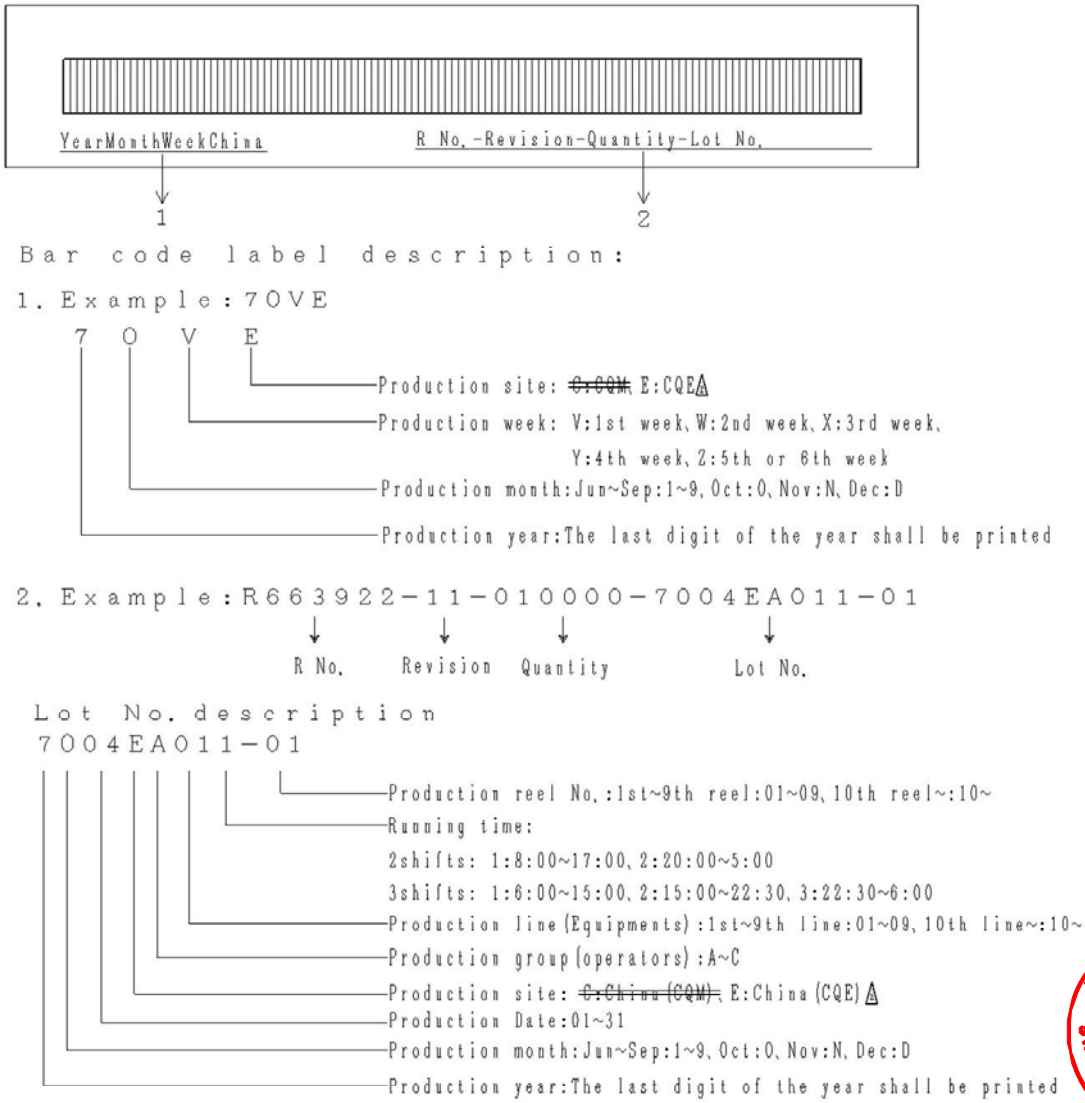

ISSUED 31.Mar 2015 SWITCH ENGINEERING DEPT.

File No.	1531