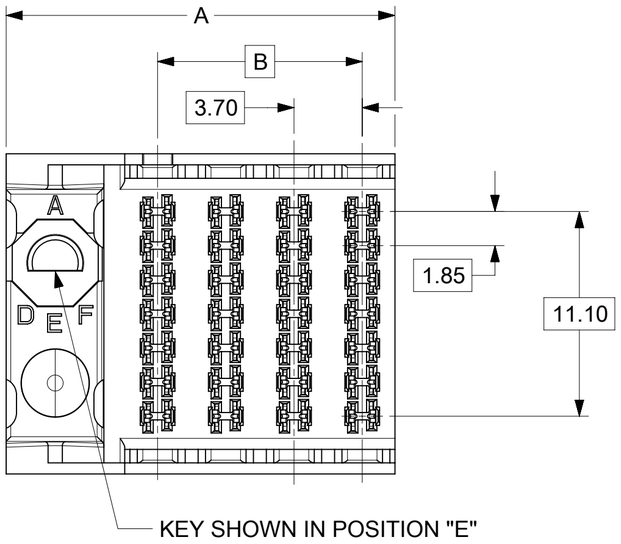

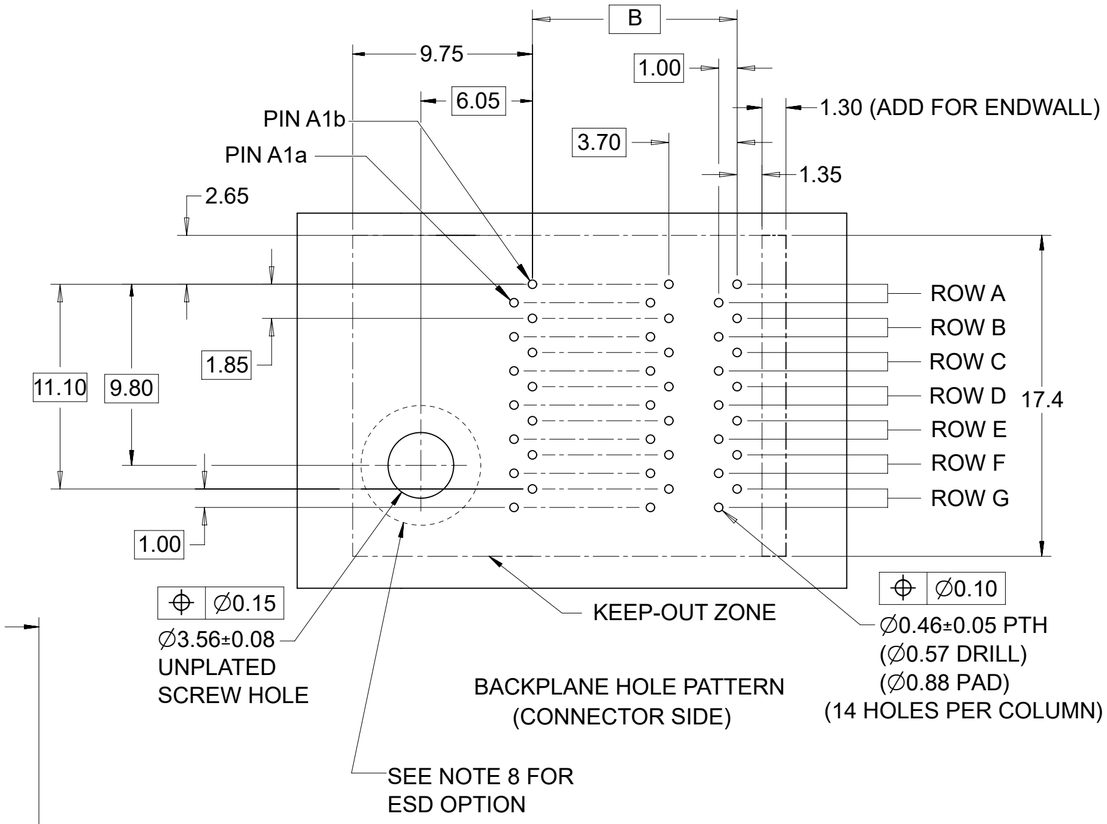

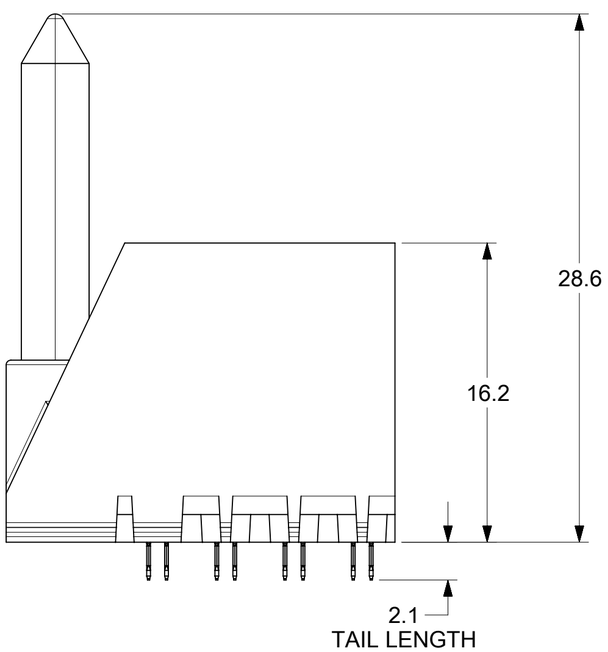

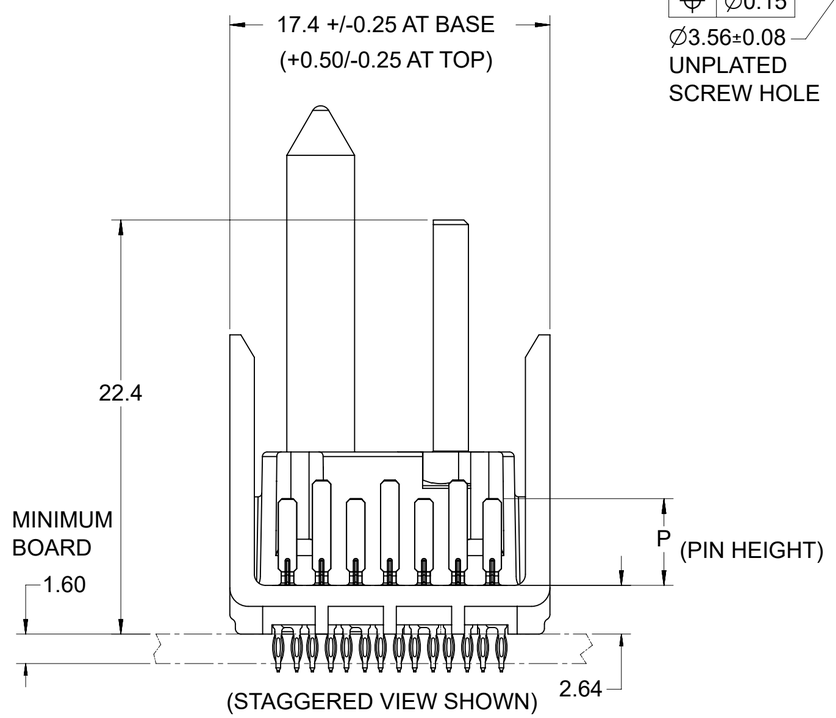

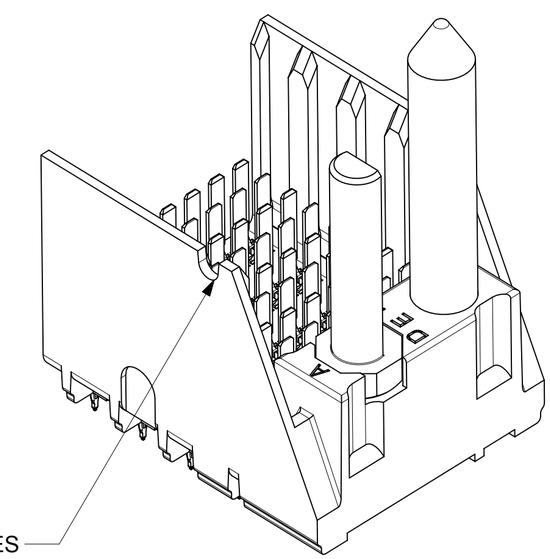

THIS DRAWING CONTAINS INFORMATION THAT IS PROPRIETARY TO MOLEX ELECTRONIC TECHNOLOGIES, LLC AND SHOULD NOT BE USED WITHOUT WRITTEN PERMISSION

DIMENSION UNITS	SCALE
mm	NTS

GENERAL TOLERANCES (UNLESS SPECIFIED)

ANGULAR TOL	±	0.5 °
4 PLACES	±	
3 PLACES	±	
2 PLACES	±	0.13
1 PLACE	±	0.25
0 PLACES	±	

DRAFT WHERE APPLICABLE MUST REMAIN WITHIN DIMENSIONS

CURRENT REV DESC: REMASTERED TO NX

EC NO: 671119
DRWN: YOGEEB 2021/04/29
CHK'D: VINODM3 2022/02/03
APPR: CWANG25 2022/02/18

INITIAL REVISION:
DRWN: BPISZCZOR 2007/02/08
APPR: JLAURX 2007/02/09

THIRD ANGLE PROJECTION | DRAWING: C-SIZE | SERIES: 76015

molex

I-TRAC BACKPLANE 7 ROW
GUIDE LEFT ASSEMBLY SALES DRAWING

PRODUCT CUSTOMER DRAWING

DOCUMENT NUMBER	DOC TYPE	DOC PART	REVISION
SD-76015-002	PSD	001	E1

MATERIAL NUMBER	CUSTOMER	SHEET NUMBER
SEE TABLE	GENERAL MARKET	1 OF 4

DOCUMENT STATUS	P1	RELEASE DATE	2022/02/18 05:04:06

FORMAT: master-tb-prod-C
REVISION: J
DATE: 2020/01/14

76015-* * * *

MODULE TYPE -- TAIL PLATING TYPE
GUIDE LEFT -- TIN ONLY = 2 (PREVIOUSLY TIN/LEAD)
GUIDE LEFT -- TIN ONLY = 3
GUIDE LEFT W/END -- TIN ONLY = 6 (PREVIOUSLY TIN/LEAD)
GUIDE LEFT W/END -- TIN ONLY = 7

# OF COLUMNS
4 = 4 COL
6 = 6 COL
1 = 10 COL

KEY ORIENTATION
0 = NO KEY
1 = A
2 = B
3 = C
4 = D
5 = E
6 = F
7 = G
8 = H

PIN LENGTH (P)
2 = 3.90 - 30 GOLD
3 = 4.70 - 30 GOLD
4 = 5.70 - 30 GOLD
5 = 4.70 & 5.70 - 30 GOLD STAGGERED
6 = 3.90 - 10 GOLD
7 = 4.70 - 10 GOLD
8 = 5.70 - 10 GOLD
9 = 4.70 & 5.70 - 10 GOLD STAGGERED

MATERIAL NUMBER	# OF COLUMNS	DIM "A"	DIM "B"
76015-*4**	4	21.1	11.10
76015-*6**	6	28.5	18.50
76015-*1**	10	43.3	33.30

GUIDE LEFT STYLE

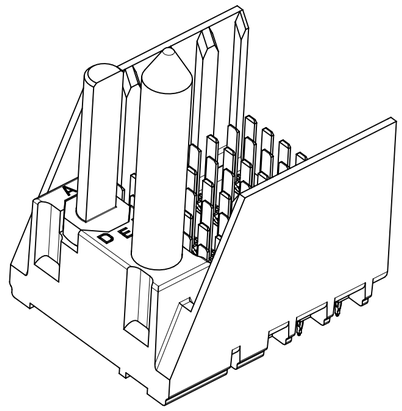

MATERIAL NUMBER	# OF COLUMNS	DIM "A"	DIM "B"
76015-*4**	4	22.4	11.10
76015-*6**	6	29.8	18.50
76015-*1**	10	44.6	33.30

GUIDE LEFT W/END STYLE

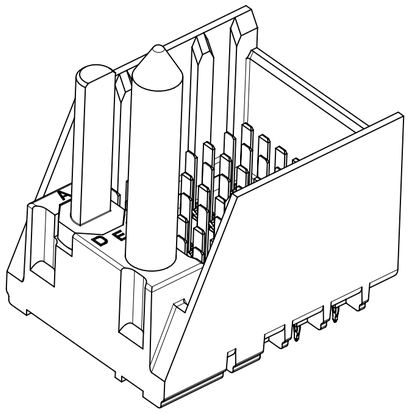

NOTES:
1. MATERIALS: HOUSING - LIQUID CRYSTAL POLYMER (LCP)
GLASS-FILLED, UL94V-0
TERMINALS - HIGH PERFORMANCE COPPER ALLOY
2. FINISH: 10 MICROINCH MINIMUM GOLD OR 30 MICROINCH MINIMUM GOLD
IN CONTACT AREA. SELECTIVE MATTE TIN ON PCB TAILS,
NICKEL OVERALL.
3. REFER TO MOLEX PRODUCT SPECIFICATION PS-75710-999
FOR PERFORMANCE SPECIFICATIONS.
4. FOR MIXED CONTACT MATING LENGTHS, CONSULT MOLEX
FOR AVAILABLITY.
5. THIS PART CONFORMS TO CLASS B REQUIREMENTS OF
COSMETIC SPEC PS-45499-002.
6. PACKAGE PER: PK-70873-802.
7. GUIDED PARTS TO BE SHIPPED WITH 2-56 UNC B SCREW P/N 73774-1000.
8. FOR GROUNDED GUIDE PINS USE DIA 3.56+/-0.08 (PTH),
DIA 3.66 (DRILL), AND DIA 6.5 (PAD).
9. REFER TO PCB ROUTING GUIDE FOR ANTIPAD AND ROUTING RECOMMENDATIONS.

THIS DRAWING CONTAINS INFORMATION THAT IS PROPRIETARY TO MOLEX ELECTRONIC TECHNOLOGIES, LLC AND SHOULD NOT BE USED WITHOUT WRITTEN PERMISSION

DIMENSION UNITS	SCALE
mm	NTS

GENERAL TOLERANCES (UNLESS SPECIFIED)

ANGULAR TOL	±	0.5 °
4 PLACES	±	
3 PLACES	±	
2 PLACES	±	0.13
1 PLACE	±	0.25
0 PLACES	±	

DRAFT WHERE APPLICABLE MUST REMAIN WITHIN DIMENSIONS

CURRENT REV DESC: REMASTERED TO NX

EC NO: 671119
DRWN: YOGEEB 2021/04/29
CHK'D: VINODM3 2022/02/03
APPR: CWANG25 2022/02/18

INITIAL REVISION:
DRWN: BPISZCZOR 2007/02/08
APPR: JLAURX 2007/02/09

THIRD ANGLE PROJECTION | DRAWING: C-SIZE | SERIES: 76015

molex

I-TRAC BACKPLANE 7 ROW
GUIDE LEFT ASSEMBLY SALES DRAWING

PRODUCT CUSTOMER DRAWING

DOCUMENT NUMBER	DOC TYPE	DOC PART	REVISION
SD-76015-002	PSD	001	E1

MATERIAL NUMBER	CUSTOMER	SHEET NUMBER
SEE TABLE	GENERAL MARKET	2 OF 4

DOCUMENT STATUS	P1	RELEASE DATE	2022/02/18 05:04:06

FORMAT: master-tb-prod-C
REVISION: J
DATE: 2020/01/14

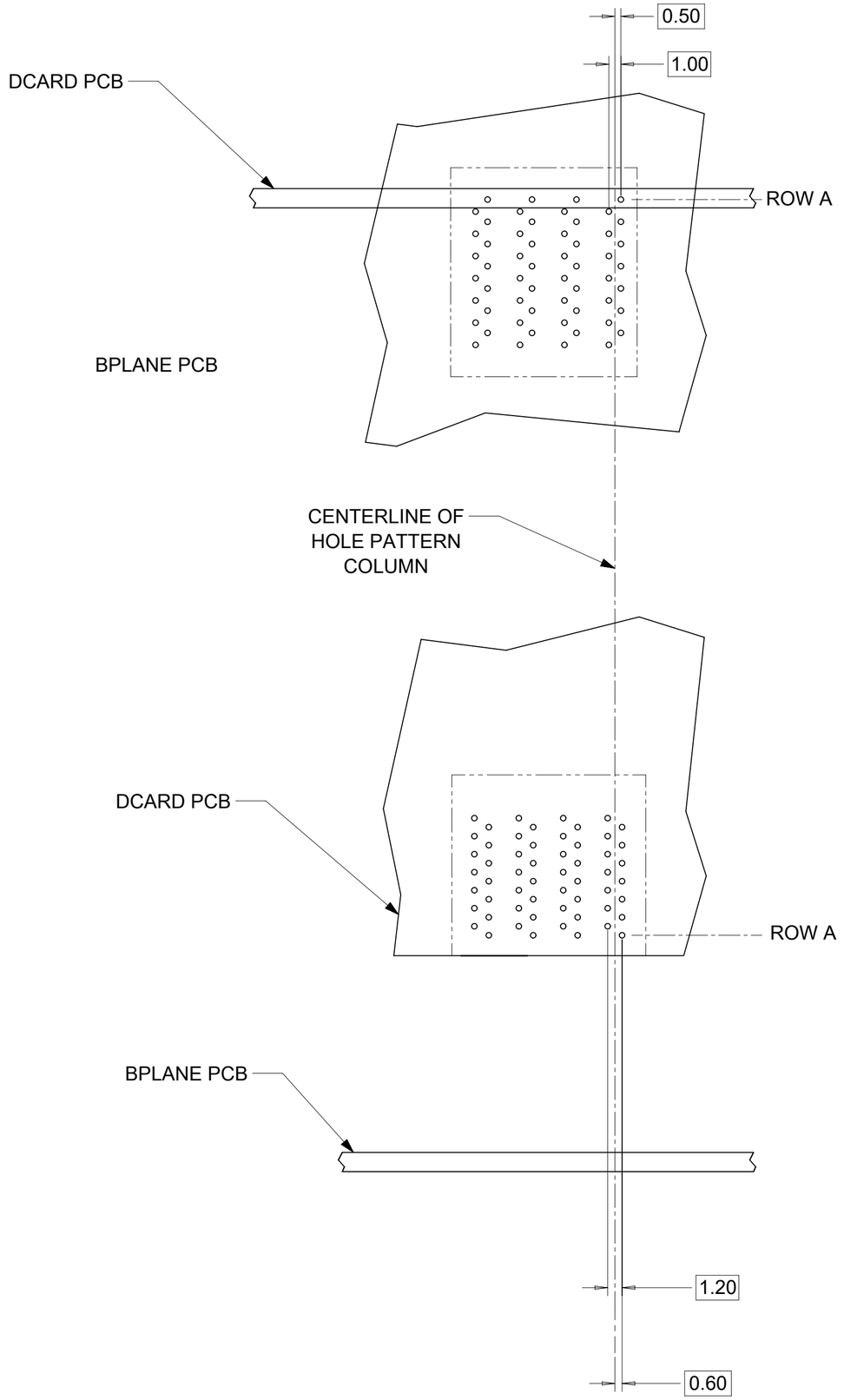

7 ROW I-TRAC BOARD RELATIONSHIPS

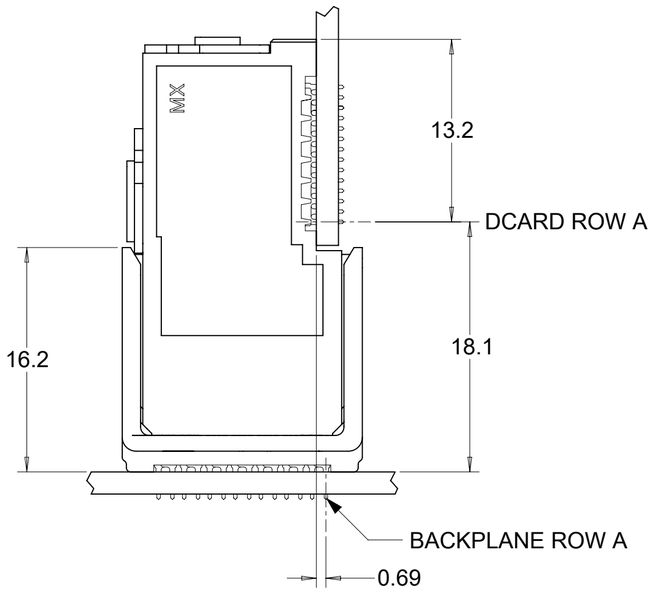

THIS DRAWING CONTAINS INFORMATION THAT IS PROPRIETARY TO MOLEX ELECTRONIC TECHNOLOGIES, LLC AND SHOULD NOT BE USED WITHOUT WRITTEN PERMISSION

DIMENSION UNITS	SCALE
mm	NTS

GENERAL TOLERANCES (UNLESS SPECIFIED)

ANGULAR TOL	±	0.5 °
4 PLACES	±	
3 PLACES	±	
2 PLACES	±	0.13
1 PLACE	±	0.25
0 PLACES	±	

DRAFT WHERE APPLICABLE MUST REMAIN WITHIN DIMENSIONS

CURRENT REV DESC: REMASTERED TO NX

EC NO: 671119
DRWN: YOGEEB 2021/04/29
CHK'D: VINODM3 2022/02/03
APPR: CWANG25 2022/02/18

INITIAL REVISION:
DRWN: BPISZCZOR 2007/02/08
APPR: JLAURX 2007/02/09

THIRD ANGLE PROJECTION | DRAWING: C-SIZE | SERIES: 76015

molex

I-TRAC BACKPLANE 7 ROW
GUIDE LEFT ASSEMBLY SALES DRAWING

PRODUCT CUSTOMER DRAWING

DOCUMENT NUMBER	DOC TYPE	DOC PART	REVISION
SD-76015-002	PSD	001	E1

MATERIAL NUMBER	CUSTOMER	SHEET NUMBER
SEE TABLE	GENERAL MARKET	3 OF 4

DOCUMENT STATUS	P1	RELEASE DATE	2022/02/18 05:04:06

FORMAT: master-tb-prod-C
REVISION: J
DATE: 2020/01/14

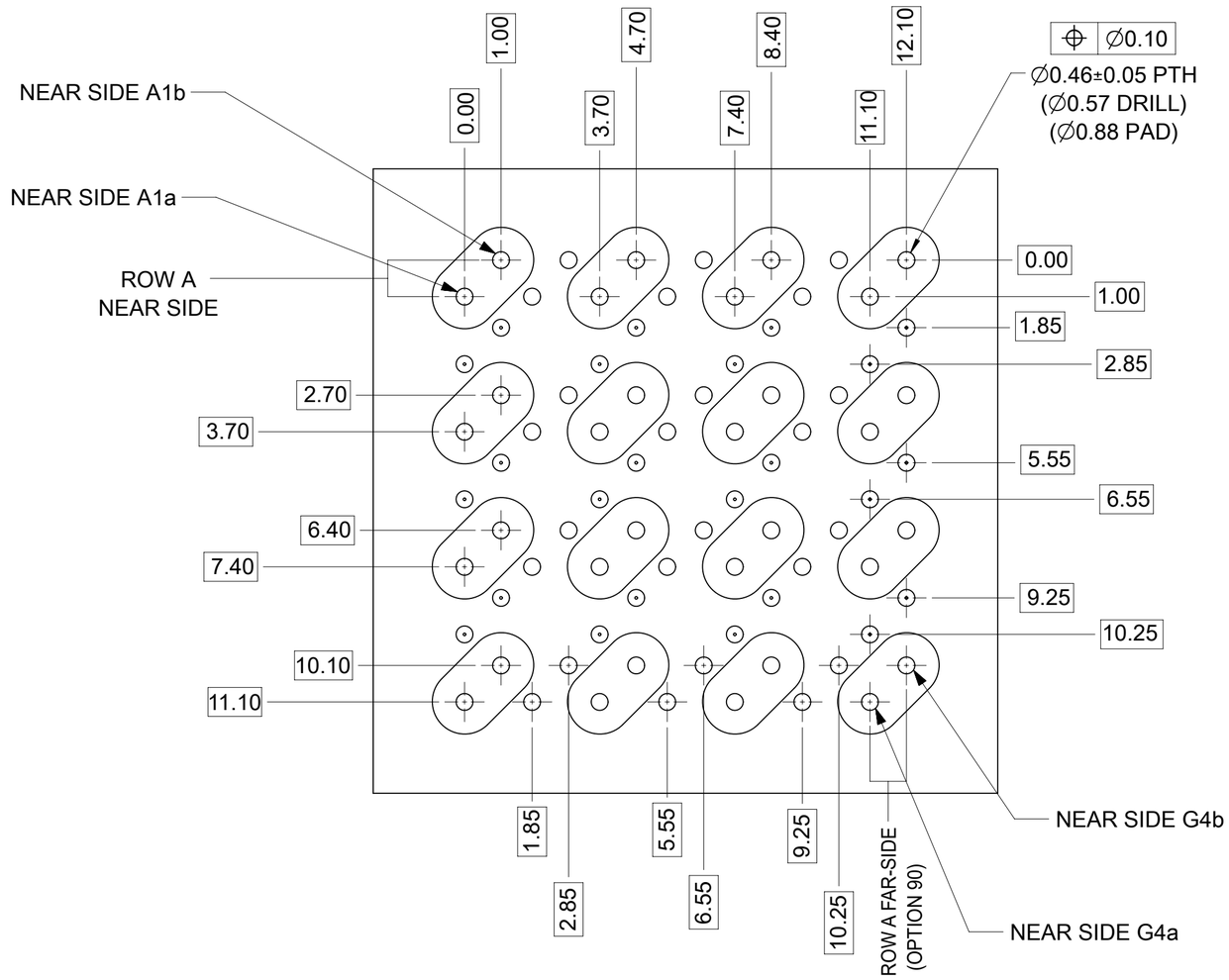

Orthorogonal PCB Layout

ORTHO PIN MAPPING

OPTION 90 (NEAR SIDE - FAR SIDE)

A1b-G4b	A2b-E4b	A3b-C4b	A4b-A4b
A1a-G4a	A2a-E4a	A3a-C4a	A4a-A4a
C1b-G3b	C2b-E3b	C3b-C3b	C4b-A3b
C1a-G3a	C2a-E3a	C3a-C3a	C4a-A3a
E1b-G2b	E2b-E2b	E3b-C2b	E4b-A2b
E1a-G2a	E2a-E2a	E3a-C2a	E4a-A2a
G1b-G1b	G2b-E1b	G3b-C1b	G4b-A1b
G1a-G1a	G2a-E1a	G3a-C1a	G4a-A1a

ORTHO PIN MAPPING

OPTION 270 (NEAR SIDE - FAR SIDE)

A1b-A1a	A2b-C1a	A3b-E1a	A4b-G1a
A1a-A1b	A2a-C1b	A3a-E1b	A4a-G1b
C1b-A2a	C2b-C2a	C3b-E2a	C4b-G2a
C1a-A2b	C2a-C2b	C3a-E2b	C4a-G2b
E1b-A3a	E2b-C3a	E3b-E3a	E4b-G3a
E1a-A3b	E2a-C3b	E3a-E3b	E4a-G3b
G1b-A4a	G2b-C4a	G3b-E4a	G4b-G4a
G1a-A4b	G2a-C4b	G3a-E4b	G4a-G4b

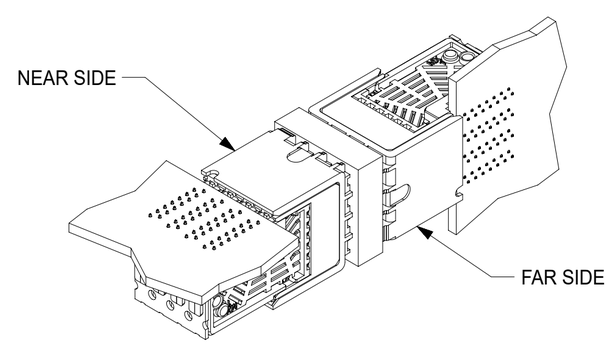

OPTION 90

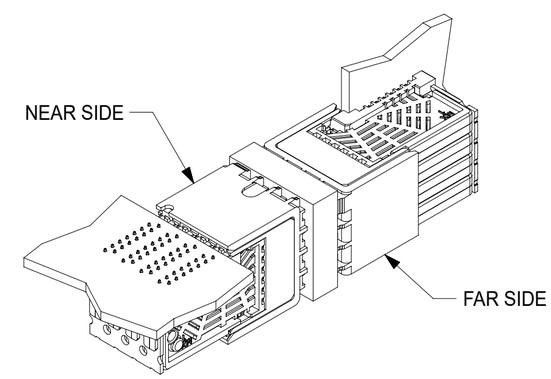

OPTION 270

NOTES:

SIGNAL PAIRS (SHARED VIAS)

⊙ NEAR SIDE GROUNDS

○ FAR SIDE GROUNDS

THIS DRAWING CONTAINS INFORMATION THAT IS PROPRIETARY TO MOLEX ELECTRONIC TECHNOLOGIES, LLC AND SHOULD NOT BE USED WITHOUT WRITTEN PERMISSION

DIMENSION UNITS	SCALE
mm	NTS

GENERAL TOLERANCES (UNLESS SPECIFIED)

ANGULAR TOL	±	0.5 °
4 PLACES	±	
3 PLACES	±	
2 PLACES	±	0.13
1 PLACE	±	0.25
0 PLACES	±	

DRAFT WHERE APPLICABLE MUST REMAIN WITHIN DIMENSIONS

CURRENT REV DESC: REMASTERED TO NX

EC NO: 671119
DRWN: YOGEEB 2021/04/29
CHK'D: VINODM3 2022/02/03
APPR: CWANG25 2022/02/18

INITIAL REVISION:
DRWN: BPISZCZOR 2007/02/08
APPR: JLAURX 2007/02/09

THIRD ANGLE PROJECTION | DRAWING: C-SIZE | SERIES: 76015

molex

I-TRAC BACKPLANE 7 ROW
GUIDE LEFT ASSEMBLY SALES DRAWING

PRODUCT CUSTOMER DRAWING

DOCUMENT NUMBER	DOC TYPE	DOC PART	REVISION
SD-76015-002	PSD	001	E1

MATERIAL NUMBER	CUSTOMER	SHEET NUMBER
SEE TABLE	GENERAL MARKET	4 OF 4

DOCUMENT STATUS	P1	RELEASE DATE	2022/02/18 05:04:06

FORMAT: master-tb-prod-C
REVISION: J
DATE: 2020/01/14