THIS COPY IS PROVIDED ON A RESTRICTED BASIS AND IS NOT TO BE USED IN ANY WAY DETRIMENTAL TO THE INTERESTS OF PANDUIT CORP.

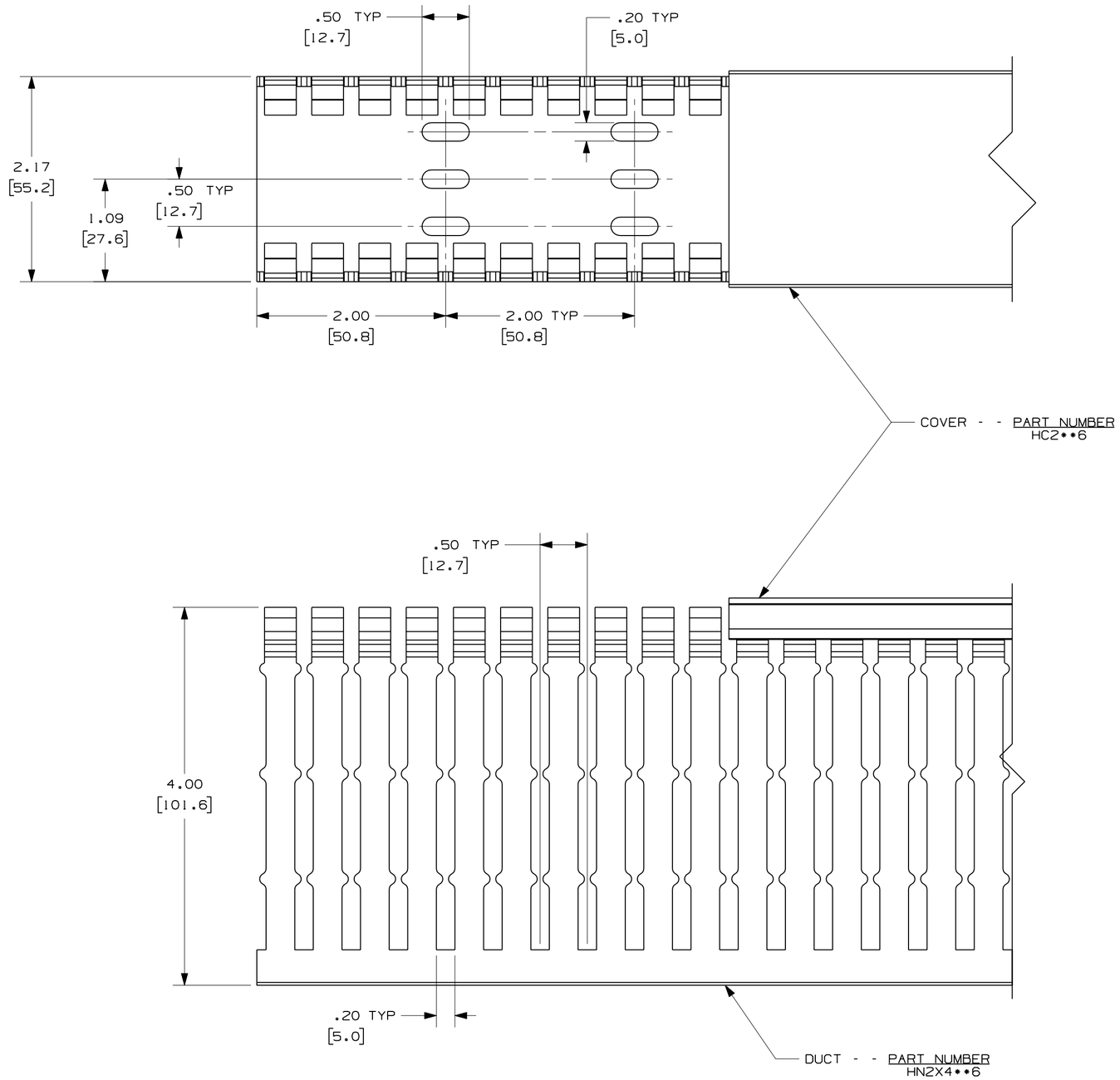

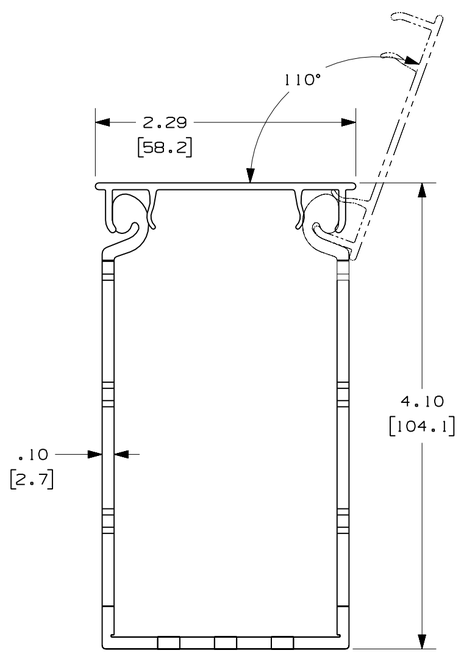

NOTES:
1. ALL DIMENSIONS ARE REFERENCE ONLY.
2. DIMENSIONS IN PARENTHESES ARE METRIC.
3. THE ** INDICATES COLOR.
4. DUCT AND COVER ARE AVAILABLE IN 6 FT (1828.8) LENGTHS.

REV	DATE	BY	CHK	DESCRIPTION
R	11-19-07	JCST	MKBE	DRAWING RELEASED

CAD FILENAME/LAYERS: D11000UY_DC/00A

PANDUIT CORP TINLEY PARK, ILLINOIS

WIRING DUCT - TYPE HN WITH COVER 2X4

MARKETING DRAWING

DRAWN BY	MAT'L:	SCALE
JCST	PVC	FULL
DATE 11-19-07		DRAWING NO. 36897-1241
CHK'D MKBE		DWG SIZE C