THIS COPY IS PROVIDED ON A RESTRICTED BASIS AND IS NOT TO BE USED IN ANY WAY DETRIMENTAL TO THE INTERESTS OF PANDUIT CORP.

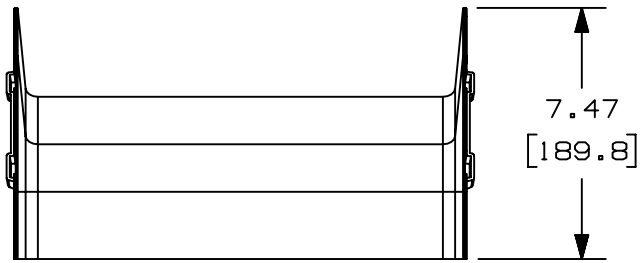

NOTES:

1. SEE CURRENT CATALOG FOR ADDITIONAL PART SUFFIXES TO INDICATE COLOR AND/OR PACKAGE QUANTITY.
2. THE FIBERRUNNER 12x4 OUTSIDE VERTICAL 45° ANGLE FITTING IS DESIGNED WITH A MINIMUM 2" (50.8) BEND RADIUS TO PROTECT FIBER OPTIC CABLES.
3. DIMENSIONS IN PARENTHESES ARE IN METRIC.
4. PARTS SUPPLIED:
   (1)- OUTSIDE VERTICAL 45°

PANDUIT PART NUMBER	WEIGHT	MATERIAL
FROV4512X4**	0.72 LB/EACH (325g/EACH)	ABS
FROV4512X4L**	0.72 LB/EACH (325g/EACH)	PC/ABS

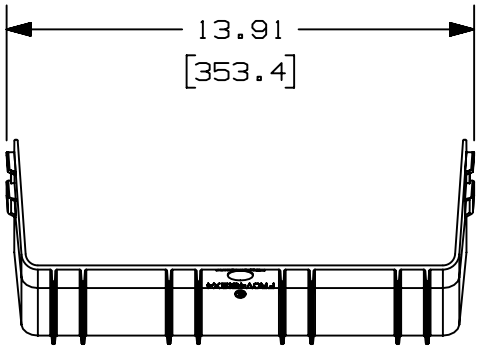

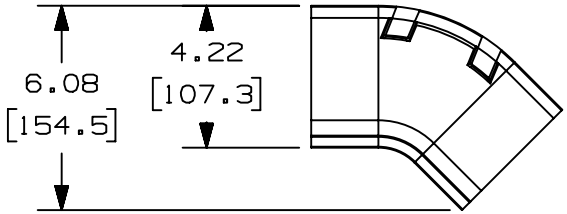

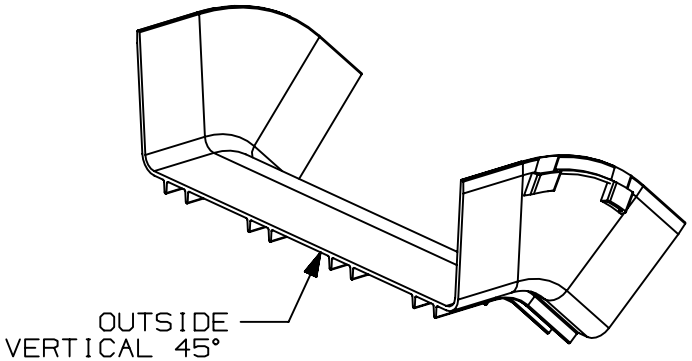

REV	DATE	BY	CHK	APR	DESCRIPTION	ECN
02A	8/21/20	MEX-JAGC	DWR	DWR	ADDED PART NUMBER	V09002DZ/11

TITLE
FIBERRUNNER 12x4 OUTSIDE VERTICAL 45° ANGLE FITTING (FROV4512X4**, FROV4512X4L**)

CUSTOMER DRAWING

ITEM REVISION NAME: D37617CC/02

DATASET FILE NAME: D37617CC_DC/02A

PANDUIT

MATERIAL: SEE PART NUMBER TABLE ABOVE

THIRD ANGLE PROJECTION

DRAWING NUMBER: 37617-82

DRAWN BY	DATE	CHK	SCALE		SIZE
JHNU	1/5/01	LD	NONE	SHT 1 OF 1	A

D10100DA/20