REVISION HISTORY				
ECO	REV	DESCRIPTION	APPROVED	DATE
-	2	PRODUCTION	ANDY R	2013 July 8

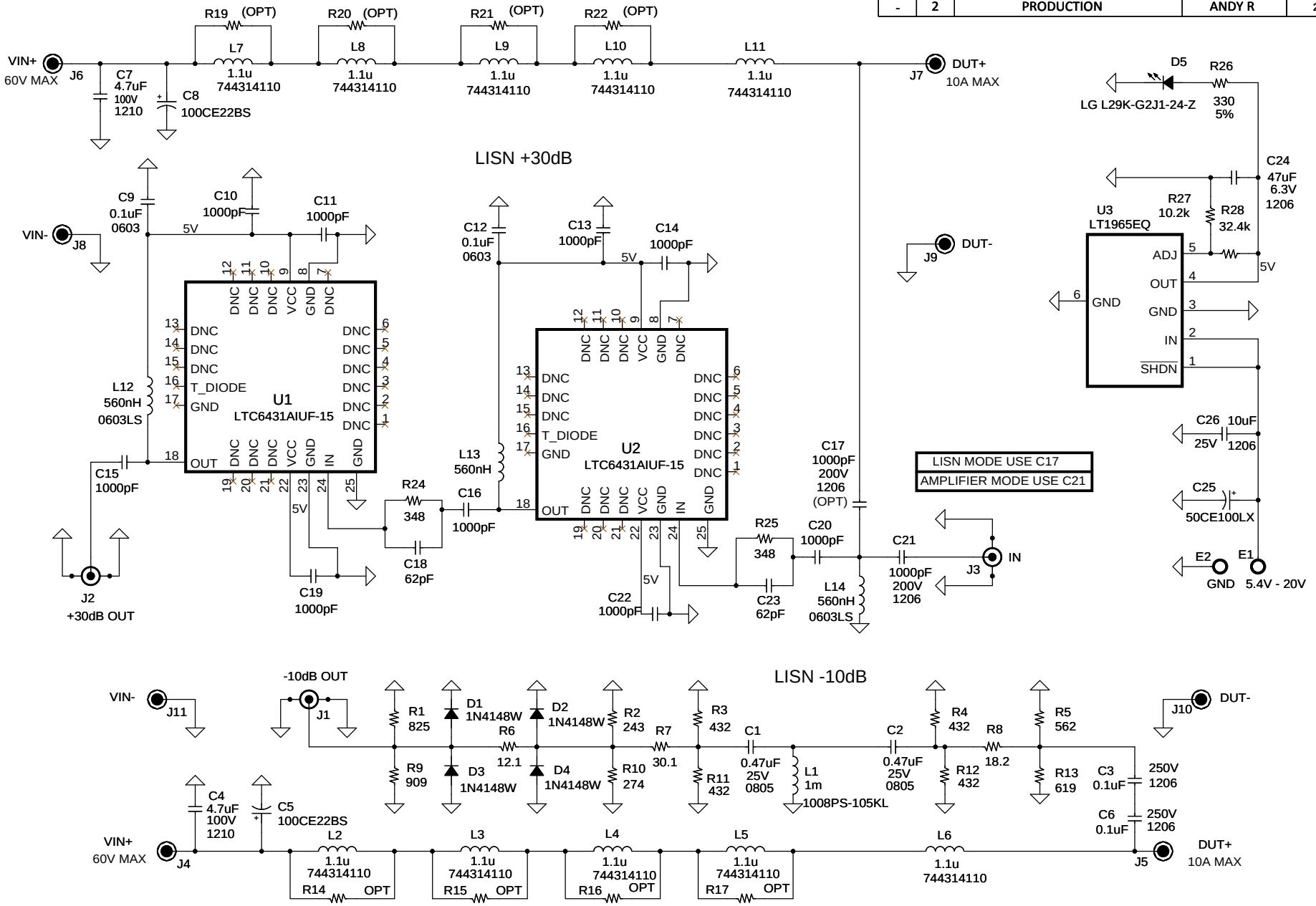

NOTE: UNLESS OTHERWISE SPECIFIED

ALL RESISTORS ARE 0603, 1%,
ALL CAPACITORS ARE 0402.

CUSTOMER NOTICE

LINEAR TECHNOLOGY HAS MADE A BEST EFFORT TO DESIGN A CIRCUIT THAT MEETS CUSTOMER-SUPPLIED SPECIFICATIONS; HOWEVER, IT REMAINS THE CUSTOMER'S RESPONSIBILITY TO VERIFY PROPER AND RELIABLE OPERATION IN THE ACTUAL APPLICATION. COMPONENT SUBSTITUTION AND PRINTED CIRCUIT BOARD LAYOUT MAY SIGNIFICANTLY AFFECT CIRCUIT PERFORMANCE OR RELIABILITY. CONTACT LINEAR TECHNOLOGY APPLICATIONS ENGINEERING FOR ASSISTANCE.

THIS CIRCUIT IS PROPRIETARY TO LINEAR TECHNOLOGY AND SUPPLIED FOR USE WITH LINEAR TECHNOLOGY PARTS.

APPROVALS	
PCB DES.	LORRAINE J.
APP ENG.	ANDY R.
SCALE = NONE	

LINEAR TECHNOLOGY
1630 McCarthy Blvd.
Milpitas, CA 95035
Phone: (408)432-1900
Fax: (408)434-0507
www.linear.com

LTC CONFIDENTIAL - FOR CUSTOMER USE ONLY

TITLE: SCHEMATIC
DUAL LISN, -10dB AND +30dB
AMPLIFIER 5uH, 10A, 60V

SIZE	IC NO.	REV.
N/A	DEMO CIRCUIT 2130A	2

MODIFY DATE: Thursday, September 05, 2013 SHEET 1 OF 1