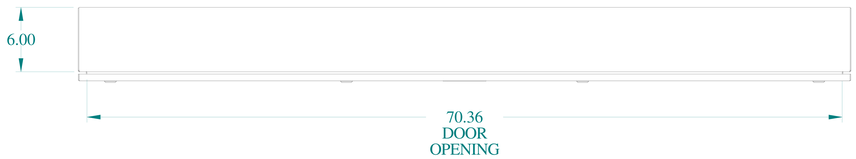

TOP VIEW

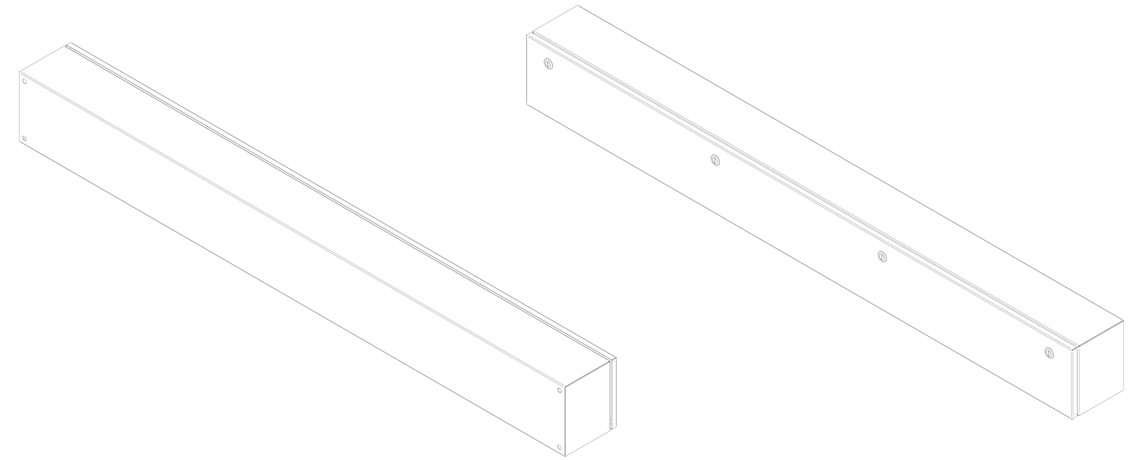

ISOMETRIC VIEWS

SIDE VIEW

FRONT VIEW

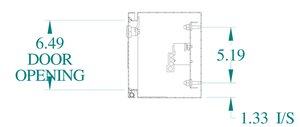

SECTION Z-Z

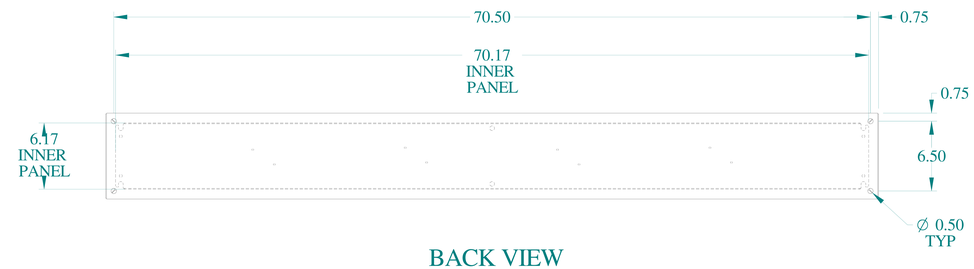

BACK VIEW

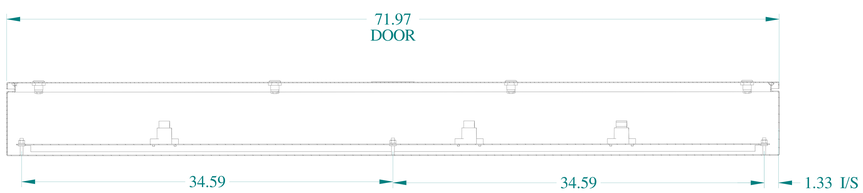

SECTION Y-Y

HAMMOND MANUFACTURING®

www.hammondmfg.com

Data subject to change without notice.

Part # : CN4ST6103	Date : Mar. 23, 2019

Link:www.hammfg.com/CN4ST6103