© 2022 TE Connectivity. All Rights Reserved.

REVISIONS					
P	LTR	DESCRIPTION	DATE	DWN	APVD
	A	INITIAL REVISION	06FEB2022	KR	RM

SECTION A-A

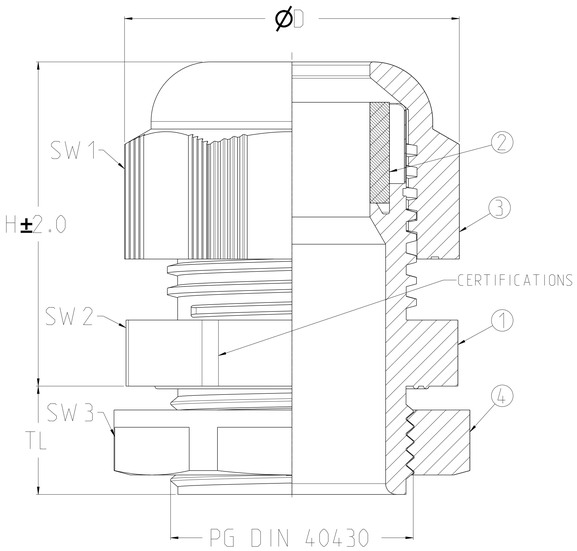

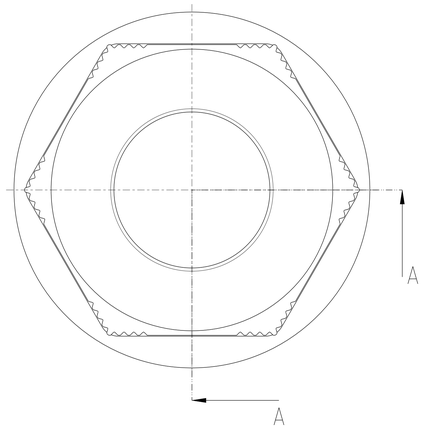

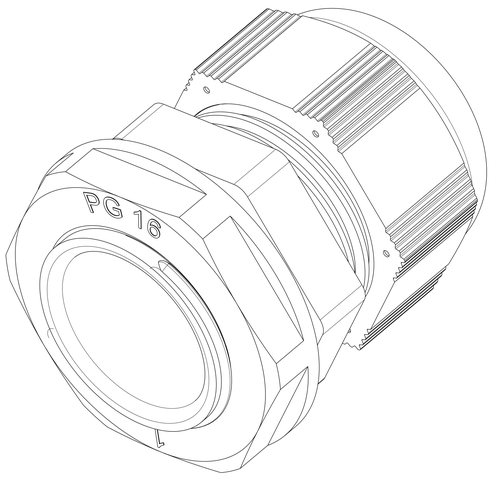

TCPN	TE Product Type (Entrelec)	RAL NUMBER	COLOR	UL RATING	CERTIFICATIONS			PG DIN 40430	TL	H	ØD	SW 1	SW 2	SW 3	Clamping Range Ø min - max
1SNG626142R0000	EP-SGL-PG9-LGR-A	7035	L.Grey	TYPE 4X	cURus	-	cCSAus	PG 9	8.0	25.4	21.7	19	19	22	2.0 - 6.0
1SNG626143R0000	EP-SGL-PG9-GR-A	7001	Grey	TYPE 4X	cURus	-	cCSAus	PG 9	8.0	25.4	21.7	19	19	22	2.0 - 6.0
1SNG626144R0000	EP-SGL-PG9-BL-A	9005	Black	TYPE 4X	cURus	-	cCSAus	PG 9	8.0	25.4	21.7	19	19	22	2.0 - 6.0
1SNG626145R0000	EP-SGL-PG9-LGR-B	7035	L.Grey	TYPE 4X	cURus	-	cCSAus	PG 9	8.0	25.4	21.7	19	19	22	4.0 - 8.0
1SNG626146R0000	EP-SGL-PG9-GR-B	7001	Grey	TYPE 4X	cURus	-	cCSAus	PG 9	8.0	25.4	21.7	19	19	22	4.0 - 8.0
1SNG626147R0000	EP-SGL-PG9-BL-B	9005	Black	TYPE 4X	cURus	-	cCSAus	PG 9	8.0	25.4	21.7	19	19	22	4.0 - 8.0
1SNG626148R0000	EP-SGL-PG11-LGR-A	7035	L.Grey	TYPE 4X	cURus	-	cCSAus	PG 11	8.0	30.2	25.0	22	22	24	3.0 - 7.0
1SNG626149R0000	EP-SGL-PG11-GR-A	7001	Grey	TYPE 4X	cURus	-	cCSAus	PG 11	8.0	30.2	25.0	22	22	24	3.0 - 7.0
1SNG626150R0000	EP-SGL-PG11-BL-A	9005	Black	TYPE 4X	cURus	-	cCSAus	PG 11	8.0	30.2	25.0	22	22	24	3.0 - 7.0
1SNG626151R0000	EP-SGL-PG11-LGR-B	7035	L.Grey	TYPE 4X	cURus	-	cCSAus	PG 11	8.0	30.2	25.0	22	22	24	5.0 - 10.0
1SNG626152R0000	EP-SGL-PG11-GR-B	7001	Grey	TYPE 4X	cURus	-	cCSAus	PG 11	8.0	30.2	25.0	22	22	24	5.0 - 10.0
1SNG626153R0000	EP-SGL-PG11-BL-B	9005	Black	TYPE 4X	cURus	-	cCSAus	PG 11	8.0	30.2	25.0	22	22	24	5.0 - 10.0
1SNG626154R0000	EP-SGL-PG135-LGR-A	7035	L.Grey	TYPE 4X	cURus	-	cCSAus	PG 13.5	10.0	30.4	27.0	24	24	27	5.0 - 9.0
1SNG626155R0000	EP-SGL-PG135-GR-A	7001	Grey	TYPE 4X	cURus	-	cCSAus	PG 13.5	10.0	30.4	27.0	24	24	27	5.0 - 9.0
1SNG626156R0000	EP-SGL-PG135-BL-A	9005	Black	TYPE 4X	cURus	-	cCSAus	PG 13.5	10.0	30.4	27.0	24	24	27	5.0 - 9.0
1SNG626157R0000	EP-SGL-PG135-LGR-B	7035	L.Grey	TYPE 4X	cURus	-	cCSAus	PG 13.5	10.0	30.4	27.0	24	24	27	6.0 - 12.0
1SNG626158R0000	EP-SGL-PG135-GR-B	7001	Grey	TYPE 4X	cURus	-	cCSAus	PG 13.5	10.0	30.4	27.0	24	24	27	6.0 - 12.0
1SNG626159R0000	EP-SGL-PG135-BL-B	9005	Black	TYPE 4X	cURus	-	cCSAus	PG 13.5	10.0	30.4	27.0	24	24	27	6.0 - 12.0
1SNG626160R0000	EP-SGL-PG16-LGR-A	7035	L.Grey	TYPE 4X	cURus	-	cCSAus	PG 16	10.0	29.9	30.9	27	27	30	7.0 - 12.0
1SNG626161R0000	EP-SGL-PG16-GR-A	7001	Grey	TYPE 4X	cURus	-	cCSAus	PG 16	10.0	29.9	30.9	27	27	30	7.0 - 12.0
1SNG626162R0000	EP-SGL-PG16-BL-A	9005	Black	TYPE 4X	cURus	-	cCSAus	PG 16	10.0	29.9	30.9	27	27	30	7.0 - 12.0
1SNG626163R0000	EP-SGL-PG16-LGR-B	7035	L.Grey	TYPE 4X	cURus	-	cCSAus	PG 16	10.0	29.9	30.9	27	27	30	10.0 - 14.0
1SNG626164R0000	EP-SGL-PG16-GR-B	7001	Grey	TYPE 4X	cURus	-	cCSAus	PG 16	10.0	29.9	30.9	27	27	30	10.0 - 14.0
1SNG626165R0000	EP-SGL-PG16-BL-B	9005	Black	TYPE 4X	cURus	-	cCSAus	PG 16	10.0	29.9	30.9	27	27	30	10.0 - 14.0
1SNG626166R0000	EP-SGL-PG21-LGR-A	7035	L.Grey	TYPE 4X	cURus	-	cCSAus	PG 21	11.0	36.4	37.2	33	33	36	9.0 - 16.0
1SNG626167R0000	EP-SGL-PG21-GR-A	7001	Grey	TYPE 4X	cURus	-	cCSAus	PG 21	11.0	36.4	37.2	33	33	36	9.0 - 16.0
1SNG626168R0000	EP-SGL-PG21-BL-A	9005	Black	TYPE 4X	cURus	-	cCSAus	PG 21	11.0	36.4	37.2	33	33	36	9.0 - 16.0
1SNG626169R0000	EP-SGL-PG21-LGR-B	7035	L.Grey	TYPE 4X	cURus	-	cCSAus	PG 21	11.0	36.4	37.2	33	33	36	13.0 - 18.0
1SNG626170R0000	EP-SGL-PG21-GR-B	7001	Grey	TYPE 4X	cURus	-	cCSAus	PG 21	11.0	36.4	37.2	33	33	36	13.0 - 18.0
1SNG626171R0000	EP-SGL-PG21-BL-B	9005	Black	TYPE 4X	cURus	-	cCSAus	PG 21	11.0	36.4	37.2	33	33	36	13.0 - 18.0
1SNG626172R0000	EP-SGL-PG29-LGR-A	7035	L.Grey	TYPE 4X	cURus	-	cCSAus	PG 29	11.0	41.3	47.1	42	42	46	12.0 - 20.0
1SNG626173R0000	EP-SGL-PG29-GR-A	7001	Grey	TYPE 4X	cURus	-	cCSAus	PG 29	11.0	41.3	47.1	42	42	46	12.0 - 20.0
1SNG626174R0000	EP-SGL-PG29-BL-A	9005	Black	TYPE 4X	cURus	-	cCSAus	PG 29	11.0	41.3	47.1	42	42	46	12.0 - 20.0
1SNG626175R0000	EP-SGL-PG29-LGR-B	7035	L.Grey	TYPE 4X	cURus	-	cCSAus	PG 29	11.0	41.3	47.1	42	42	46	18.0 - 25.0
1SNG626176R0000	EP-SGL-PG29-GR-B	7001	Grey	TYPE 4X	cURus	-	cCSAus	PG 29	11.0	41.3	47.1	42	42	46	18.0 - 25.0
1SNG626177R0000	EP-SGL-PG29-BL-B	9005	Black	TYPE 4X	cURus	-	cCSAus	PG 29	11.0	41.3	47.1	42	42	46	18.0 - 25.0

Note:
The code of PG48 is the exceptional of this rule ,
codes for this gland are BS-10 (RAL7001) , BS-20 (RAL7035) , BS-30 (RAL9005)

RPT	QTY	DOC TITLE	DRAWING NUMBER	MATERIAL	COMMENTS
4	1	LOCK NUT	-	PA 6 %30 GF	-
3	1	CAP	-	PA6 V2 (F1 Listed)	-
2	1	SEAL	-	CR	-
1	1	BODY	-	PA6 V2 (F1 Listed)	-

THIS DRAWING IS A CONTROLLED DOCUMENT.

DIMENSIONS: mm

TOLERANCES UNLESS OTHERWISE SPECIFIED:
0 PLC ±-
1 PLC ±1
2 PLC ±1
3 PLC ±1
4 PLC ±1
ANGLES ±-

MATERIAL: REF.TABLE -
FINISH: REF.TABLE -

DWN: Rajan n. Kaul 06FEB2022
CHK: Rafeeq. Mohd 07FEB2022
APVD: Rafeeq. Mohd 07FEB2022

PRODUCT SPEC: PG-STD-GLAND-PA-LN
APPLICATION SPEC: -
WEIGHT: -

TE Connectivity

NAME: - PG-STD-GLAND-PA-LN

SIZE: A0 | CAGE CODE: 00779 | DRAWING NO: C-1SNP061304-0100 | RESTRICTED TO: -

CUSTOMER DRAWING | SCALE 5:1 | SHEET 1 OF 1 | REV A

4806 (3/13)