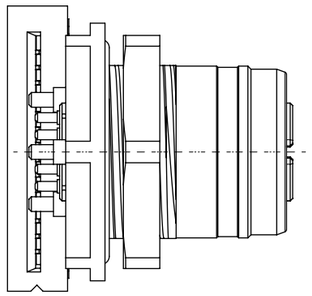

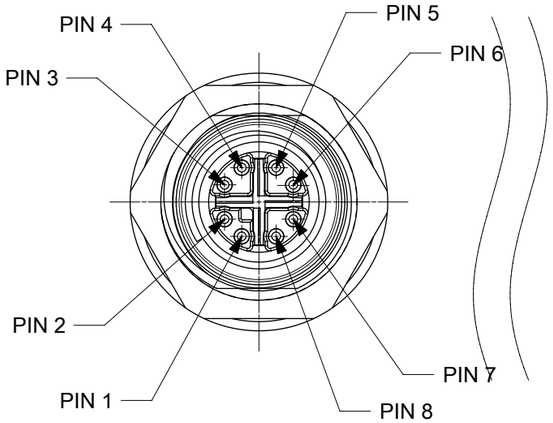

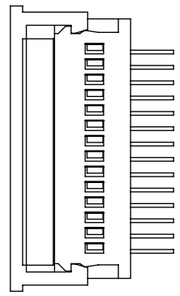

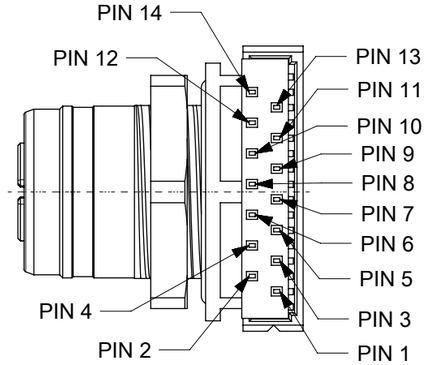

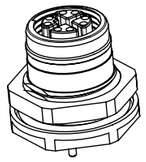

SCALE 1:1

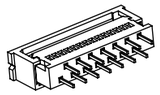

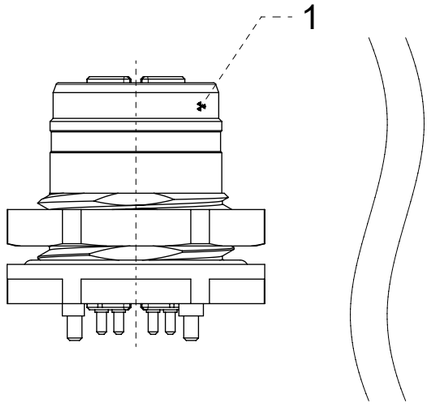

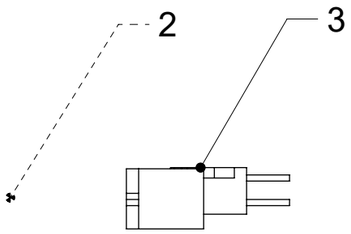

WIRING DIAGRAM

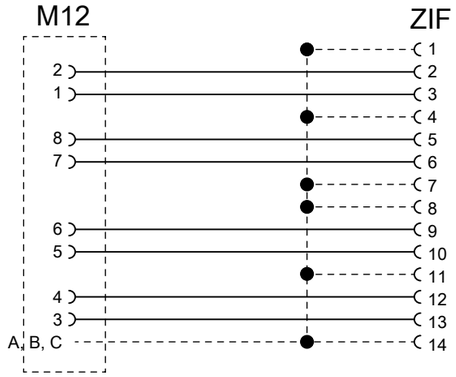

VIEW FLEXPRINT ON;Y:

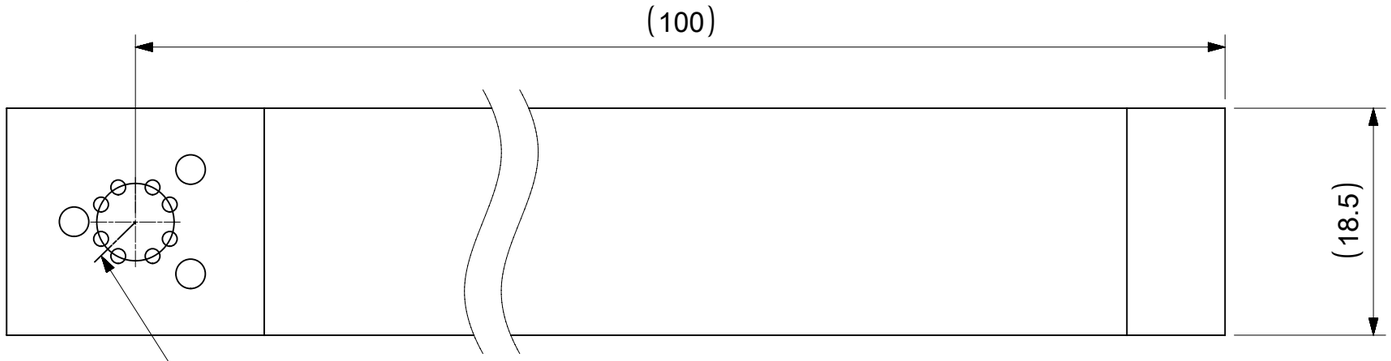

FRONT VIEW - PLACEMENT SIDE

CODING

NOTES:

ELECTRICAL PROPERTIES:
- RATED VOLTAGE: 48V
- CURRENT: 0.5A PER PIN
- IMPEDANCE 100 Ohm
- TRANSMISSION CHARACTERISTIC: CAT6A

MECHANICAL PROPERTIES:
- FLEXPRINT: PCB
- ZIFCONNECTOR SEE: MOLEX PN 3953 2145
- 14 POL 1.25 PITCH.

BOM

PIN	QTY	DESCRIPTION	MATERIAL	FINISH
3	1	FLEX CONNECTOR 14 POL 1.2 PITCH	-	-
2	1	FLEX FR4 1L SHLD 20X115	PCB	-
1	1	M12 CAT6A REC ASSY BACK MOUNT	-	-

DOCUMENT STATUS	P1	RELEASE DATE	2020/07/06 11:59:04

THIS DRAWING CONTAINS INFORMATION THAT IS PROPRIETARY TO MOLEX ELECTRONIC TECHNOLOGIES, LLC AND SHOULD NOT BE USED WITHOUT WRITTEN PERMISSION

SYMBOLS: E = 0, E = 0, E = 0, S = 0, = 0, C = 0, = 0, = 0, = 0

DIMENSION UNITS	SCALE
mm	2:1

GENERAL TOLERANCES (UNLESS SPECIFIED)

ANGULAR TOL	±	°
4 PLACES	±	
3 PLACES	±	
2 PLACES	±	0.05
1 PLACE	±	0.1
0 PLACES	±	

DRAFT WHERE APPLICABLE MUST REMAIN WITHIN DIMENSIONS

CURRENT REV DESC:

EC NO: 640862
DRWN: SSM 2020/06/22
CHK'D: RSILLER 2020/07/06
APPR: RSILLER 2020/07/06

INITIAL REVISION:
DRWN: SSM 2020/06/22
APPR: RSILLER 2020/07/06

THIRD ANGLE PROJECTION | DRAWING: A3-SIZE | SERIES: 120341

molex

REC M12 CAT6A 8P 14P XC
FE RA 10CM BM FLEX 1L SHLD 1.25PI

PRODUCT CUSTOMER DRAWING

DOCUMENT NUMBER	DOC TYPE	DOC PART	REVISION
1203410260	PSD	000	A

MATERIAL NUMBER	CUSTOMER	SHEET NUMBER
1203410260	GENERAL MARKET	1 OF 1

FORMAT: master-tb-prod-A3
REVISION: H
DATE: 2018/01/18