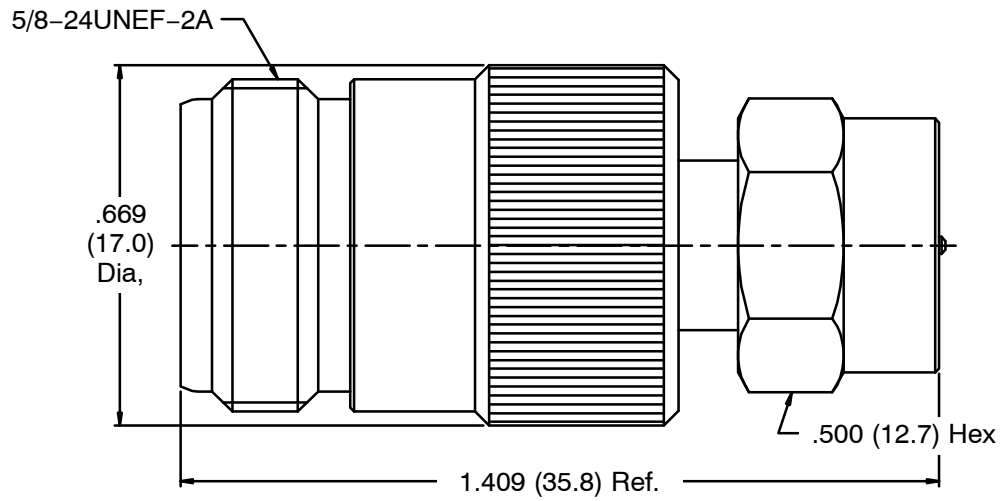

NOTES: Finish (Plating Thickness in Micro–inches)
1. Brass
2. Nickel Pl. 100 Min. Thick over Copper Pl. 50 Min, Thick
3. Phosphor Bronze
4. Gold Pl. 5 Min Thick over Copper Pl. 50 Min. Thick over Copper Pl. 50 Min Thick
5. Teflon

RoHS Compliant

No	Description	Material	Finish	Q'ty	Drawing No.
7	Gasket	Silicone	Black	1	
6	Shell	Note 1	Note 2	1	
5	Retainer Ring	SUS 304	Natural	1	
4	Inner Body	Note 1	Note 2	1	
3	Contact Pin	Note 3	Note 4	1	
2	Insulator	Note 5	Natural	1	
1	Body	Note 1	Note 2	1	

Dimensions are in Inches
Unless Otherwise Specified Tolerances
0.5–6 = ±0.2
6–30 = ±0.4
30–120 = ±0.6
120–315 = ±1
315–1000 = ±1.6
1000–2000 = ±2.4

Scale 3/1 | Issue A

Part No.

Approved | Date 12–14–2018

Checked | Date 12–14–2018

Drawn | Date 12–14–2018

NTE Electronics

Title: N Jack to F Plug Adapter

Drawing No. 06–N005

File No.