THIS DRAWING IS UNPUBLISHED. RELEASED FOR PUBLICATION 20
© COPYRIGHT 20 BY TYCO ELECTRONICS CORPORATION. ALL RIGHTS RESERVED.

SERVO FEED FINGER 2119944-1	SET UP GAUGE 2119599-1	LOC A	DIST 66

REVISIONS

P	LTR	DESCRIPTION	DATE	DWN	APVD
	1	ORIGINAL	06DEC2010	GH	GB
	A	RELEASED	07MAR2011	LG	TE
	B	ECR-11-018716	09SEP2011	LG	TE
	C	ECR-11-021773	26OCT2011	BW	GB

PART NUMBER	REV	FEED TYPE	DESCRIPTION	PROGRAMMED MEMORY CHIP	
~~2151055-1~~	~~B~~	~~MECHANICAL~~	~~FINE CRIMP HEIGHT ADJUST~~		SUPERSEDED BY 2151494-1
~~2151055-2~~	~~B~~	~~PNEUMATIC~~	~~FINE CRIMP HEIGHT ADJUST~~	-	SUPERSEDED BY 2151494-2
~~2151055-5~~	~~B~~	~~SERVO~~	~~FINE CRIMP HEIGHT ADJUST~~	~~8-2151055-5~~	4 SUPERSEDED BY 2151494-5
~~2151055-6~~	~~B~~	~~SERVO~~	~~NON-CRIMP HEIGHT ADJUST~~	~~8-2151055-6~~	4 SUPERSEDED BY 2151494-6
~~2151055-7~~	~~B~~	~~NONE~~	~~FINE CRIMP HEIGHT ADJUST~~	-	SUPERSEDED BY 2151494-7
7-2151055-7	B	-	SPARE PARTS KIT	-	

APPLICATOR DATA		
CRIMP	SIZE	TYPE
WIRE	1.40 mm [.055]	F
INSUL	1.40 mm [.055]	F
INSTRUCTION SHEET 408-10389		

TERMINAL DATA: TE TERMINAL		TE CRIMP SPEC
TERMINAL NAME: 025 RECEPTACLE CONTACT		
WIRE STRIP LENGTH 3.00-3.50 mm [.118-.138 IN]	INSULATION DIAMETER RANGE ∅ 0.95-1.70mm [.037-.067 IN]	
APPLICATION SPECIFICATION	114-5250	- -
	-	- -

TERMINALS APPLIED

TE TERMINAL	TE TERMINAL		
1674298-1	1123343-1		

WIRE SIZE	CRIMP HEIGHT mm [INCH]	CRIMP HEIGHT REFERENCE SETTING*
0.50mm2	1.06+/-0.05 [.042+/-.002]	6.8
0.30mm2	0.96+/-0.05 [.038+/-.002]	7.8
0.22mm2	0.84+/-0.05 [.033+/-.002]	9.3

1

1 RECOMMENDED SPARE PARTS

2 GREASE BEARING SURFACES LIGHTLY

3. LUBRICATE DAILY PER THE APPLICATOR INSTRUCTION SHEET SUPPLIED WITH THE APPLICATOR.

4 APPLICATOR SPECIFIC DATA TO BE ENTERED INTO BLANK MEMORY CHIP AT ASSEMBLY.

5 TO CONVERT THE APPLICATOR TO A NON-CARRIER CUTTING STYLE, REMOVE ITEM 13 AND ATTACH TO THE LOCATION INDICATED.

6. POSITIONAL ADJUSTMENTS OF THE STRIPPER MAY BE REQUIRED WHEN MOVING THE APPLICATOR BETWEEN BENCH AND LEADMAKER APPLICATIONS.

7. FOR THE PACIFIC VERSION OF THIS APPLICATOR, SEE PRINT 2151055-9

8 GREASE THREADS, GROOVE AND O-RING ON ITEMS 35 & 252.

9 MAGNET MUST BE ORIENTED CORRECTLY IN ORDER TO PROPERLY ACTUATE THE COUNTER.

10 APPLY PART NUMBER 1-23419-5 LOCTITE TO THREADS OF ITEM 50.

11 CRIMP HEIGHT REFERENCE SETTING WAS THE SETTING USED WHEN APPLICATOR WAS QUALIFIED AT THE FACTORY. ADJUSTMENT MAY BE NECESSARY WHEN RUNNING APPLICATOR IN THE FIELD.

12 SPARE FEED CAM STORAGE LOCATION REFER TO INSTRUCTION SHEET 408-10389 SECTION 2.1 FIGURE 4.

13. APPLICATOR WITH MECHANICAL FEED SYSTEMS CAM SETUP REFER TO APPLICATION SPECIFICATION 408-10389 SECTION 2.1 FIGURE 5.

14. ON INSTALLATION, SET WIRE DISC, ITEM 40 TO LARGEST WIRE SIZE SETTING. USE OF SETTINGS BELOW MINIMUM REQUIRED CRIMP HEIGHT SETTING WILL CAUSE DAMAGE TO CRIMP TOOLING.

PART REQUIRED FOR FEED CONVERSIONS		
FEED VER. TO CONVERT TO	RETROFIT KIT	ADDITIONAL PARTS REQ'D
MECHANICAL	2119949-1	56
PNEUMATIC	2119950-1	56
SERVO	2119951-1	135 & 240

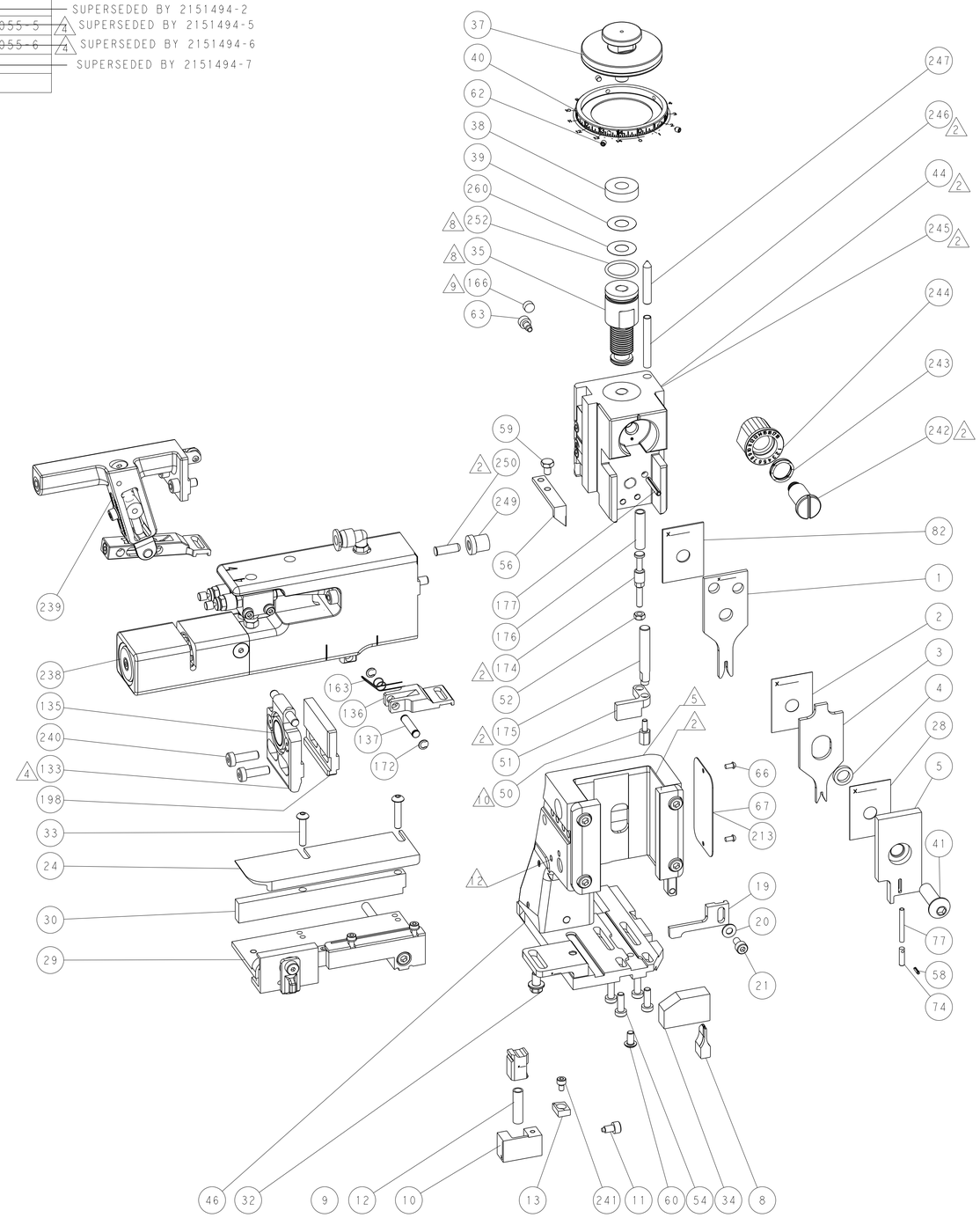

-	-	1	-	-	-	2119957-2	APPLICATOR SHIM PACK	260
-	1	-	1	1	1	8-21084-0	O-RING, .676 ID, .070 DIA. MAT.	252
-	-	-	-	1	-	2119640-1	PUSH ROD, AIR FEED	250
-	-	-	-	1	-	2079988-1	BUSHING, LCH5-12, MISUMI	249
-	-	-	-	1	-	2119641-1	FEED CAM, AIR FEED	248
-	1	-	1	1	1	2119798-1	DETENT PIN	247
-	1	-	1	1	1	1-22279-3	SPRING, COMPRESSION	246
-	-	1	-	-	-	2119758-1	RAM, AMP STYLE, SIDE FEED, NON-ADJ.	245
-	1	1	1	1	1	2119082-9	CAM, SNAIL, INSULATION ADJUSTMENT	244
-	1	1	1	1	1	2079764-1	WASHER, WAVE SPRING, CREST-TO-CREST	243
-	1	1	1	1	1	2119083-1	RETAINER, INSULATION DIAL	242
-	1	1	1	1	1	18023-1	SCR, SKT HD CAP M3 X 5.0	241
-	-	2	2	-	-	2168400-6	SHCS, LOW HEAD, RoHS, M5 X 16	240
-	-	-	-	-	1	2119580-1	MECHANICAL FEED ASSEMBLY	239
-	-	-	-	1	-	2063440-1	AIR FEED MODULE	238
-	-	1	1	-	-	2119740-2	TAG,IDENTIFICATION	213
-	-	1	1	-	-	1901094-3	SPACER, FEEDER	198
-	1	1	1	1	1	993111-1	PIN, SLOTTED SPRING 3.0 X 20.0	177
-	1	1	1	1	1	8-22280-7	SPRING, COMPRESSION	176
-	1	1	1	1	1	1752353-2	GUIDE PIN,HOLDDOWN	175
-	1	1	1	1	1	1901680-2	GUIDE PIN,HOLDDOWN	174
-	-	-	-	2	-	21045-3	RING, RETAIN, EXTERN, 3/16 CRESCENT	172
-	1	1	1	1	1	994969-1	MAGNET, RARE EARTH HIGH ENERGY	166
-	-	-	-	1	-	240638-1	SPRING, FEED FINGER	163
-	-	-	-	1	-	3-23627-7	PIN, RETAIN, GRVD, 3/16 X .854	137
-	-	-	-	1	-	2119799-1	HOLDER,FEED FINGER, AF	136
-	-	REF	REF	-	-	SEE TABLE	MEMORY CHIP, PROGRAMMED	135
-	-	1	1	-	-	1633743-1	SERVO FEED LATCH ASM	133
-	1	1	1	1	1	455888-8	SPACER, CRIMPER	82
-	1	1	1	1	1	5-547505-2	SPRING, COMPRESSION	77
-	1	1	1	1	1	854769-4	HOLDER, INS	74
-	1	1	1	1	1	2119956-1	DOCUMENTATION PACKAGE	71
-	1	-	-	1	1	2119740-1	TAG,IDENTIFICATION	67
-	2	2	2	2	2	2168078-1	SCREW, DRIVE, RH, RoHS	66
-	1	-	1	1	1	2119793-1	LIMITER, ADJUSTMENT BOLT	63
-	3	-	3	3	3	992763-5	SCR, SET, SOC, CONE POINT, M3 x 4.0	62
-	1	1	1	1	1	2079383-4	SCR, BHSC, RoHS (M4 X 8)	60
-	-	-	-	1	1	5-18022-5	SCR, HEX HD CAP, M4 X 6.0	59
-	1	1	1	1	1	21028-2	PIN, SLOTTED SPRING .062 X .250	58
-	-	-	-	1	1	1338685-1	PAWL, FEED	56
-	4	4	4	4	4	2168400-1	SHCS, LOW HEAD, RoHS, M4 X 12	54
-	1	1	1	1	1	1-5018030-0	NUT, HEX, REG, RoHS, M3.5	52
-	1	1	1	1	1	1901681-1	HOLDDOWN, TERMINAL	51
-	1	1	1	1	1	1-1752354-8	STANDOFF,HOLD-DOWN	50
-	-	-	-	1	2	18023-9	SCR, SKT HD CAP M4 X 6.0	49
-	-	-	-	-	1	2119652-1	FEED CAM, PRE FEED	48
-	-	-	-	-	1	2119653-1	FEED CAM, POST FEED	47
-	1	1	1	1	1	2119656-9	APPLICATOR BASIC ASSEMBLY, SF	46
-	1	-	1	1	1	2119370-1	RAM, AMP STYLE, SIDE FEED	44
-	1	1	1	1	1	2079383-7	SCR, BHSC, RoHS (M8 X 25)	41
-	1	-	1	1	1	2119645-1	DISC, NUMBERED FA WIRE ADJUSTMENT	40
-	1	-	1	1	1	2119957-1	APPLICATOR SHIM PACK	39
-	1	1	1	1	1	2119644-1	RAM WASHER, PRECISION	38
-	1	1	1	1	1	2119085-1	FA HEAD, ATLANTIC STYLE	37
-	1	-	1	1	1	2119092-1	BOLT, ADJUSTMENT	35
-	1	1	1	1	1	3-1752356-3	SUPPORT, TERMINAL	34
-	2	2	2	2	2	2079383-5	SCR, BHSC, RoHS (M4 X 20)	33
-	1	1	1	1	1	2161328-1	HEX HEAD, FLANGED, M5 x 8mm LONG	32
-	1	1	1	1	1	1320908-6	SPACER, STRIP GUIDE	30
-	1	1	1	1	1	2119959-1	ASSEMBLY, STRIP GUIDE	29
-	1	1	1	1	1	455888-3	SPACER, CRIMPER	28
-	1	1	1	1	1	1320928-2	PLATE, STRIP GUIDE	24
-	1	1	1	1	1	2168083-2	SCR, SKT HD CAP, RoHS, M4 X 8.0	21
-	1	1	1	1	1	1-18028-2	WASHER, FLAT, REG M4	20
-	1	1	1	1	1	2119533-1	STRIPPER, SIDE FEED	19
1 -	1	1	1	1	1	2119806-1	INSERT, SHEAR	13
-	1	1	1	1	1	3-22280-3	SPRING, COMPRESSION	12
-	1	1	1	1	1	356885-5	STOP, SHEAR	11
1 -	1	1	1	1	1	2119805-1	SHEAR HOLDER, FRONT	10
1 -	1	1	1	1	1	462006-6	FLOATING SHEAR, FRONT	9
1 1	1	1	1	1	1	1-1633128-6	ANVIL, COMBINATION .055	8
-	1	1	1	1	1	2119780-9	DEPRESSOR, SHEAR	5
-	1	1	1	1	1	1-238011-0	BLOCK, CRIMPER SPACER	4
1 1	1	1	1	1	1	1633962-2	CRIMPER, INSULATION F PREMIUM	3
-	1	1	1	1	1	455888-1	SPACER, CRIMPER	2
1 1	1	1	1	1	1	3-456402-5	CRIMPER, WIRE PREMIUM	1
	-77	-7	-6	-5	-2	-1 PART NO	DESCRIPTION	ITEM NO

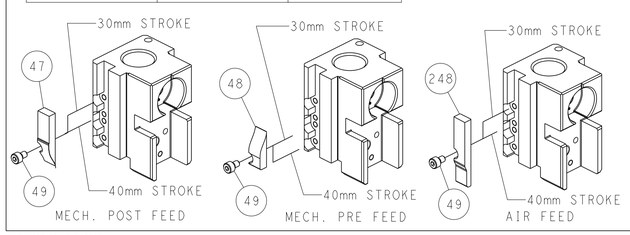

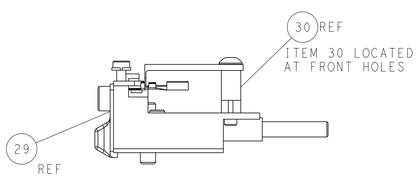

FEED TRACK POSITION GUIDE BY INSULATION BBL

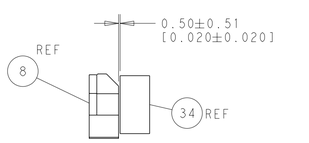

TERMINAL SUPPORT LOCATION

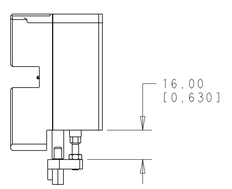

HOLDDOWN SET-UP

THIS DRAWING IS A CONTROLLED DOCUMENT FOR TYCO ELECTRONICS CORPORATION. IT IS SUBJECT TO CHANGE AND THE CONTROLLING ENGINEERING ORGANIZATION SHOULD BE CONTACTED FOR THE LATEST REVISION.

DWN G.HOFFNER	06DEC2010	TE Connectivity Harrisburg, PA 17105-3608
CHK G.BAILEY	07DEC2010	
APVD G.BAILEY	G.BAILEY2010	NAME Ocean Side Feed Atlantic Style Applicator
PRODUCT SPEC -		
APPLICATION SPEC -		
WEIGHT -		SIZE A · CAGE CODE 00779 · DRAWING NO C-2151055 · RESTRICTED TO -
CUSTOMER ACCESSABLE PRODUCTION DRAWING		SCALE 1:2 · SHEET 1 OF 1 · REV C

DIMENSIONS: mm

TOLERANCES UNLESS OTHERWISE SPECIFIED:
0 PLC ±-
1 PLC ±0.5
2 PLC ±0.13
3 PLC ±0.013
4 PLC ±0.0001
ANGLES ±-

MATERIAL - -
FINISH - -

AMP 4805 REV 31MAR2000

Pro/ENGINEER DRAWING