Ratings
Voltage: 60 V
Current: 1 A
Waterproof: IP 67

Operating Temperature Range
-40 ~ 85 °C

Materials
1. Insulator: Nylon 66 + 30% glass fiber, black
2. Pin: brass, gold-flashing
3. Shell: brass, nickel plated
4. O-ring: rubber
5. Hexagonal nut: brass, nickel plated
6. O-ring: rubber

Electrical Requirements
Dielectric strength: 1 min @ 500 Vac
Insulation resistance: 10^8 Ω min
Contact resistance: 10 mΩ or less

Mechanical Requirements
Insertion force: 0.82 kgf max
Withdrawal force: 0.62 kgf max
Life cycle: 500 mating cycles

Environmental Requirements
Cold test: -25 °C for 2 hours without deformation
Heat test: 85 °C for 16 hours while maintaining minimum 10^8 Ω insulation resistance

Assembly info
Wire guage: 26 AWG max (Ø0.55 mm)
Panel cutout: Ø5.1 mm recommended

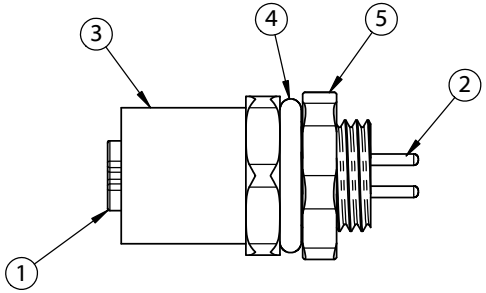

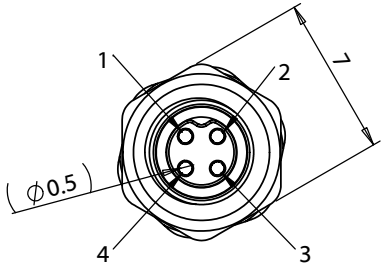

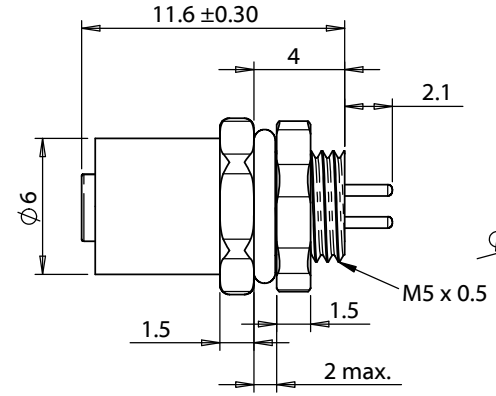

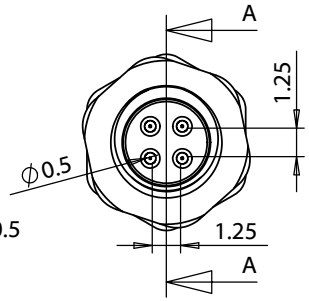

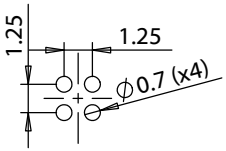

PCB Layout

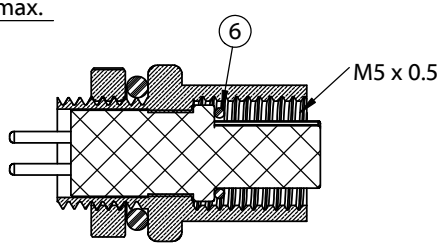

SECTION A-A

Revision:	Date:	Description:
A	8/7/2018	Initial release
A1	12/7/2018	Added PCB layout

Prepared: AG — Digitally signed by AG Date: 2018.12.11 09:44:25 -08'00'

Verified: AW — Digitally signed by AW Date: 2018.12.11 09:44:56 -08'00'

Dimensions are in millimeters.
Tolerances:
X: ± 0.3 mm
X.X: ± 0.1 mm
X.XX: ± 0.05 mm

Notes:
RoHS compliant
Function test: no open, no short circuit, no intermittent

Description:
Connector, 4 pin M5 socket, 5xL13.7mm, gold plated, panel mount, PCB, IP67

TENSILITY
tel 1.541.323.3228 800 877.670.7118
fax 1.541.323.4202 web tensility.com

Size: A
Part number: 54-00106
Scale: 3:1
Sheet 1 of 1

5 4 3 2 1