DRAWING MADE IN AMERICAN PROJECTION

PART NO	REV	A	B	T	C	TYPE	TERM.	
~~690639-1~~	~~C~~	~~.119~~	~~.200~~	~~—~~	~~1.140~~	~~I~~	~~41330~~	OBSOLETE
690639-2	E	.087	.150	—	1.155	I	61343	
690639-3	E	—	—	.080	1.155	II	61343	
690639-4	E	—	—	.080	1.175	II	61343	
~~-5~~	~~C~~	~~.273~~	~~.368~~	~~—~~	~~1.218~~	~~I~~	~~61551~~	OBSOLETE
690639-6	E	.146	.230	—	1.207	I	62783	
690639-7	E	.146	.220	—	1.207	I	60548	
~~690639-8~~	~~C~~	~~.241~~	~~.343~~	~~—~~	~~1.218~~	~~I~~	~~60770~~	OBSOLETE
690639-9	E	.188	.217	—	1.218	I	60770	
~~1-690639-0~~	~~C~~	~~—~~	~~—~~	~~.263~~	~~1.218~~	~~II~~	~~60625~~	OBSOLETE
1-690639-1	E	.050	.159/.157	—	1.172	I	40811	

NOTES
1. APPLY PART NO. PER 115-67-1,-2, OR -3 IN AREA X
2. ALT MATL 100-99 TS H.T. 111-99-3 RC 60-62

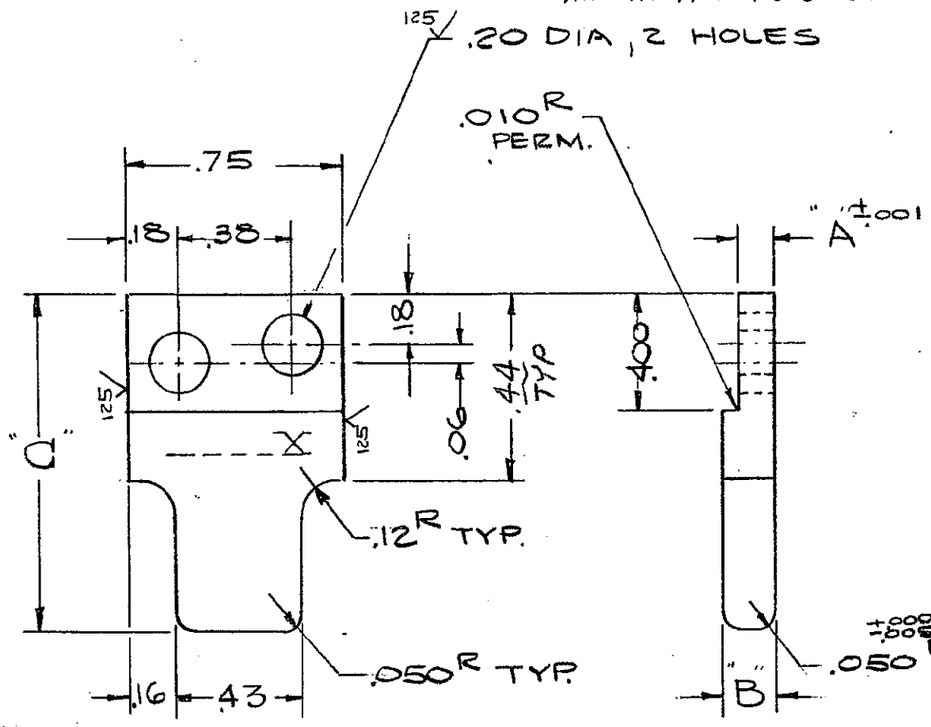

TYPE I

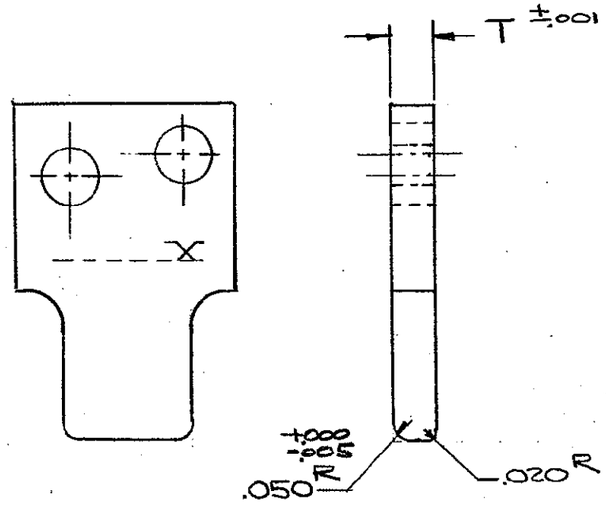

TYPE II

THIS DRAWING IS A CONTROLLED DOCUMENT FOR AMP INC. IT IS SUBJECT TO CHANGE AND THE CONTROLLING ENGINEERING ORGANIZATION SHOULD BE CONTACTED FOR THE LATEST REVISION.

THIS INFORMATION IS CONFIDENTIAL AND IS DISCLOSED TO YOU ON CONDITION THAT NO FURTHER DISCLOSURE IS MADE BY YOU TO OTHER THAN AMP PERSONNEL WITHOUT WRITTEN AUTHORIZATION FROM AMP INCORPORATED, HARRISBURG, PA.

DIMENSIONS IN INCHES. DO NOT SCALE PRINT.

USED ON

NUMBER 690639

LTR	REVISION RECORD	ECN	DR/CHK	DATE
E1	0150-0308-00, ADD -11		ROW	5-00
E	0150-0159-00		CE	2-00
D2	015A-0052-99		[illegible]	2-99
D1	0150-8377-98		[illegible]	3-98
D	0150-7047-96		[illegible]	7-96
C1	OBS -1,-5,-7 ECN A-281090	—	[illegible]	11-90
C	PER ECN A-255490		[illegible]	6-90
B3	ADD -9 & -10		[illegible]	11-89
B2	ADDED -8	—	[illegible]	7-6-89
B1	ADDED -7	—	LE/[illegible]	3-79
B	REV -6 R	2886	[illegible]	2-79
A6	ADDED -6		KS [illegible]	6-30-78
A5	ADD -5	—	[illegible]	7/17/69
A4	ADDED -4	—	[illegible]	7-16-68
A3	REDRAWN, ADDED TYPE II & -3	L 5467	NT IM	3-11-68

UNLESS OTHERWISE SPECIFIED: REMOVE BURRS, BREAK SHARP EDGES .015 R MAX. DECIMALS: .00 = ±.02, .000 = ±.005, .0000 = ±.0005. ANGLES: ±0° 30'

32

MATERIAL: 100-15 (2)
DR: 3-11-68 I. K. MILLER
APP: [illegible] 4/15/68
HEAT TREAT: RC 60-62 (2)
CHK: 3-12-68 N Tolmacher
REL: [illegible] 4-15-68
COATING OR PLATING: BLACKEN 112-157-1
AMP INCORPORATED HARRISBURG, PENNA
TERMINAL: SEE TABLE
FIRST USED: AMPOMATOR
LOC: A B
NO: 690639
REV: E1
TYPE: E.F
NAME: BENDING TOOL MINI-APPLICATOR
SCALE: 2:1

PRINT 19

AMP 1291 REV 6/66