DO NOT SCALE
DIMENSIONS IN mm

METRIC

THIRD ANGLE PROJECTION

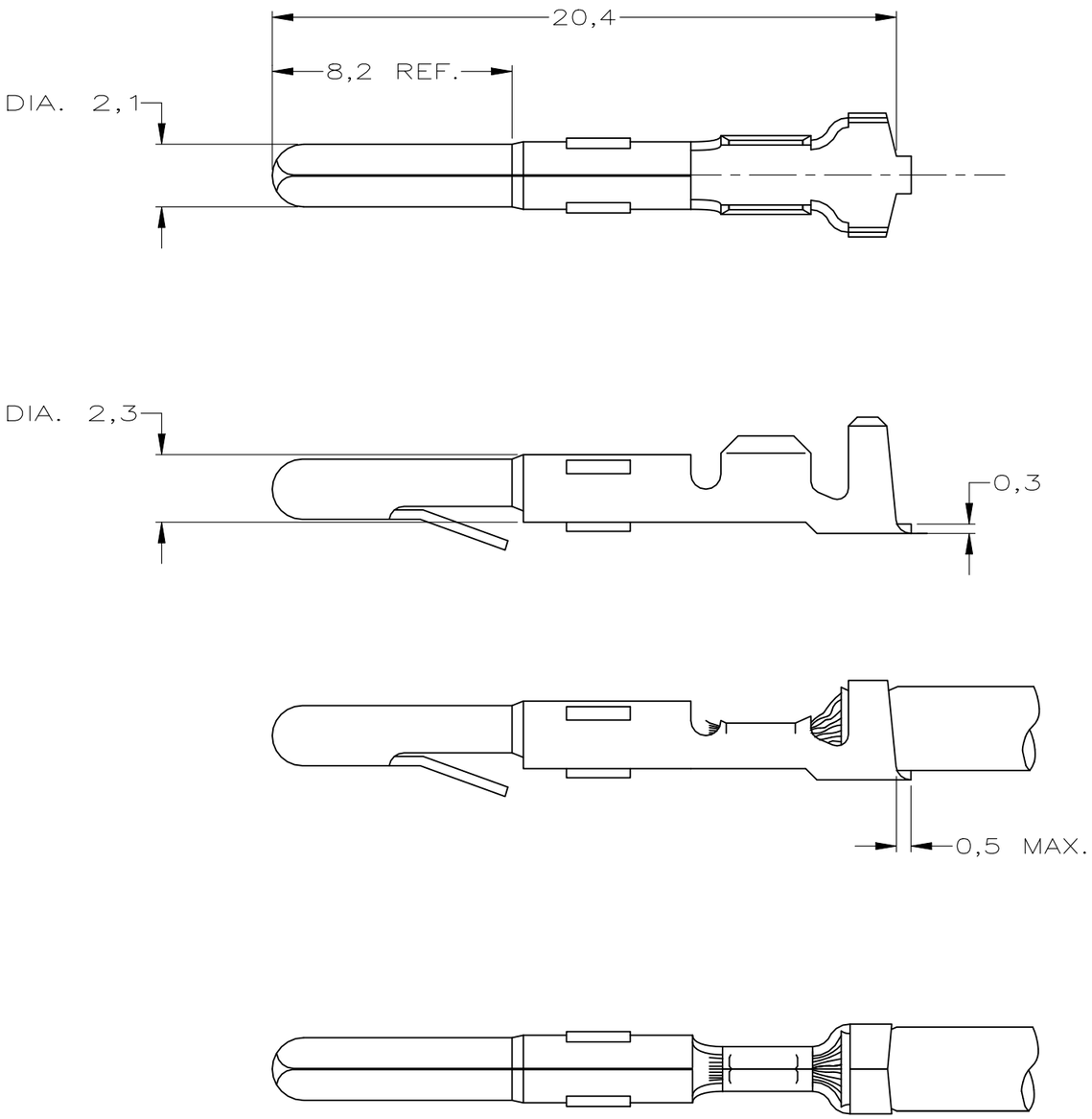

WIRE RANGE : 0,3–0,75mm

INSULATION RANGE : 1,4–2,4 DIA.

	–	–	–
		–	–
	–	–	–
	–	–	–
	–	–	–
	–	–	–
	–	–	–
	–	–	–
	PRE–TINPLATED	PHOSPHOR BR.	163558–4
	UNPLATED	PHOSPHOR BR.	163558–3
	PRE–TINPLATED	BRASS	163558–2
OBSOLETE	~~UNPLATED~~	~~BRASS~~	~~163558–1~~
NOTES	PLATING	MATERIAL	PARTNUMBER

LTR.	REVISION RECORD	DR.	CHK.	DATE
–	–	–	–	–
–	–	–	–	–
–	–	–	–	–
–	–	–	–	–
–	–	–	–	–
B1	ECN–23–195825	WLS	VS	03FEV2023
B	EH–1221–96	JvL	AB	24–10–96

CUSTOMER DRAWING — FOR REFERENCE ONLY WILL NOT BE UPDATED

© COPYRIGHT 19 – BY AMP HOLLAND B.V.
ALL INTERNATIONAL RIGHTS RESERVED. AMP PRODUCTS MAY BE COVERED BY U.S. AND FOREIGN AND/OR PATENTS PENDING.

THIS DRAWING IS UNPUBLISHED
~~RELEASED FOR PUBLICATION – – ,19 –~~

AMP HOLLAND B.V.
's–Hertogenbosch,
The Netherlands.

NAME
PIN MATE–N–LOK.

DR.: J.v.LIEMPT	CHK.: A.BIJNEN.	APP.: M.v.DRIEL	DWG.No. C– 163558	REV.LTR. B1	SHEET 1 OF 1	A3
DATE: 24 OCT 96	DATE: –	DATE: –				