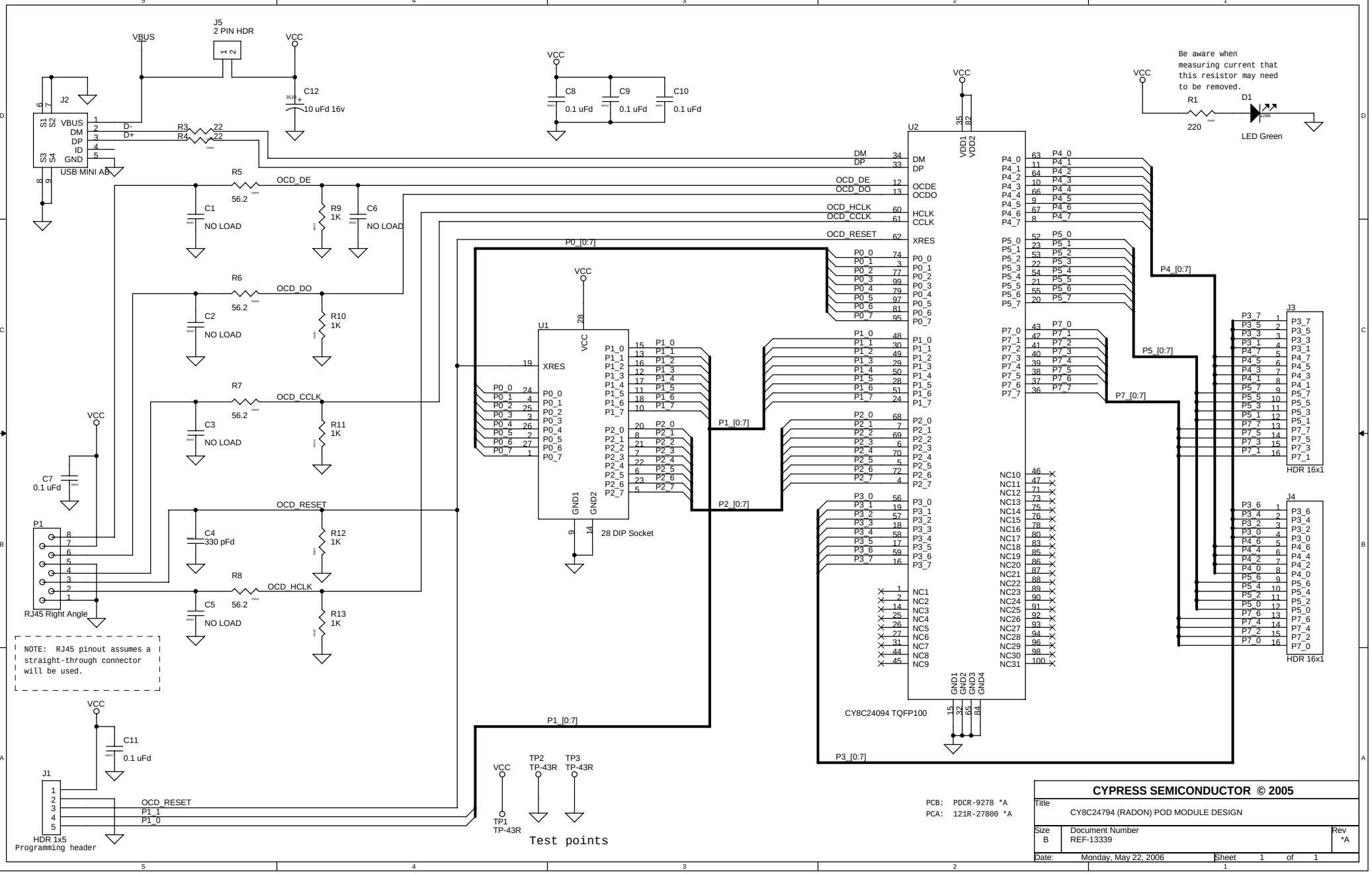
J5
2 PIN HDR
VBUS
VCC
C12
10 uFd 16v
J2
USB MINI AB
D-
D+
R3 22
R4 22
R5 56.2
OCD_DE
C1 NO LOAD
R9 1K
C6 NO LOAD
R6 56.2
OCD_DO
C2 NO LOAD
R10 1K
R7 56.2
OCD_CCLK
C3 NO LOAD
R11 1K
C7 0.1 uFd
OCD_RESET
C4 330 pFd
R12 1K
R8 56.2
OCD_HCLK
C5 NO LOAD
R13 1K
P1
RJ45 Right Angle
NOTE: RJ45 pinout assumes a straight-through connector will be used.
C8 0.1 uFd
C9 0.1 uFd
C10 0.1 uFd
U1
XRES
28 DIP Socket
P0_[0:7]
P1_[0:7]
P2_[0:7]
U2
CY8C24094 TQFP100
DM
DP
OCDE
OCDO
HCLK
CCLK
XRES
P4_[0:7]
P5_[0:7]
P7_[0:7]
P3_[0:7]
Be aware when measuring current that this resistor may need to be removed.
R1 220
D1
LED Green
J3
HDR 16x1
J4
HDR 16x1
C11 0.1 uFd
J1
HDR 1x5
Programming header
TP1 TP-43R
TP2 TP-43R
TP3 TP-43R
Test points
PCB: PDCR-9278 *A
PCA: 121R-27800 *A
CYPRESS SEMICONDUCTOR © 2005
Title
CY8C24794 (RADON) POD MODULE DESIGN
Size B
Document Number REF-13339
Rev *A
Date: Monday, May 22, 2006
Sheet 1 of 1