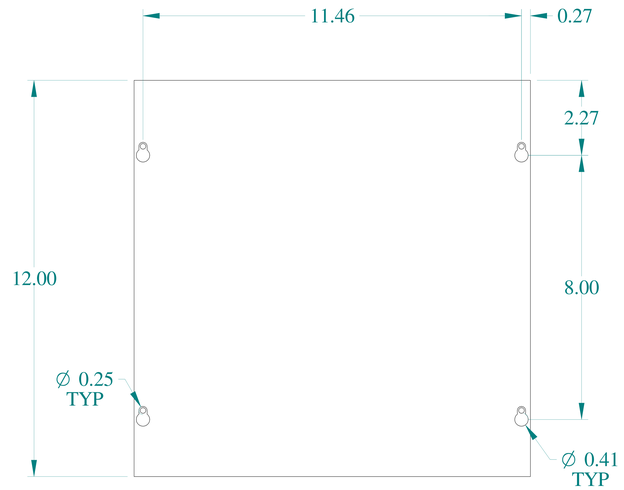

TOP VIEW

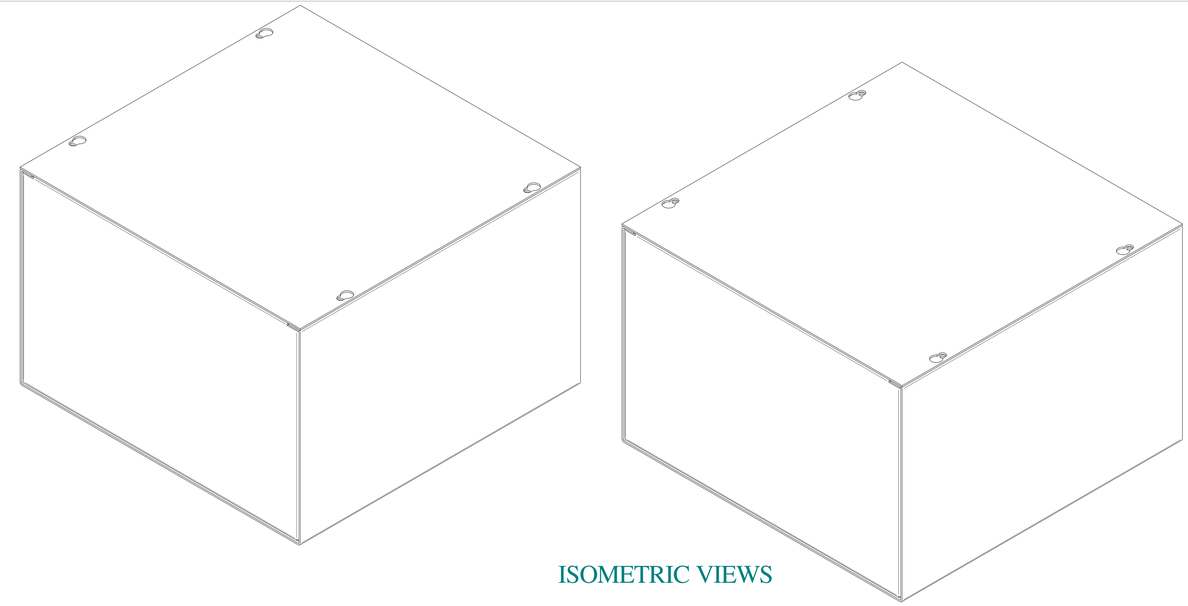

ISOMETRIC VIEWS

SIDE VIEW

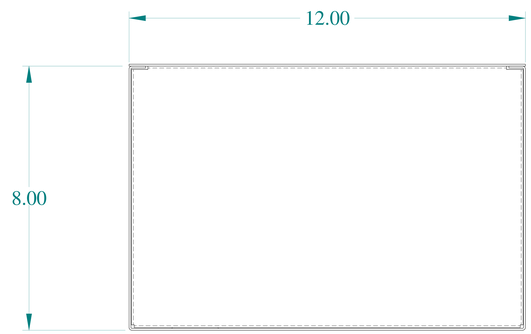

FRONT VIEW

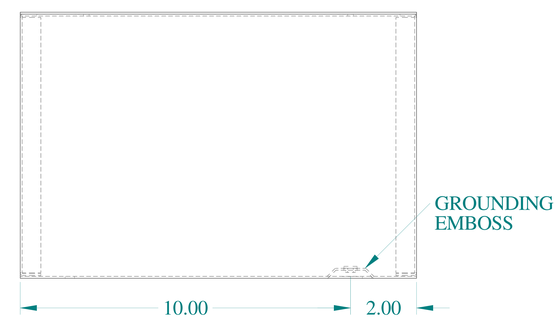

SIDE VIEW

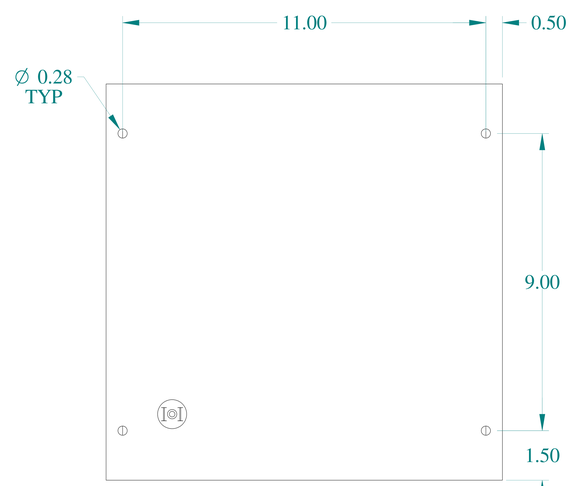

BOTTOM VIEW

HAMMOND MANUFACTURING®

www.hammondmfg.com

Data subject to change without notice.

Part # : CS12128	Date : Mar. 23, 2019

Link:www.hammfg.com/CS12128