ODU MEDI-SNAP®

ODU HIGH SPEED DATA TECHNOLOGY

www.odu-connectors.com

ODU MEDI-SNAP®

FEATURES

- Lightweight
- Easy installation and maintenance
- Space-saving design
- High chemical resistance
- Fully sterilizable
- Quick mating with push-pull locking
- Easy-to-release break-away function
- Disposable solution available
- IEC 60601-1 compliant

APPLICATIONS

- Medical
- Industrial
- Digital test and measurement

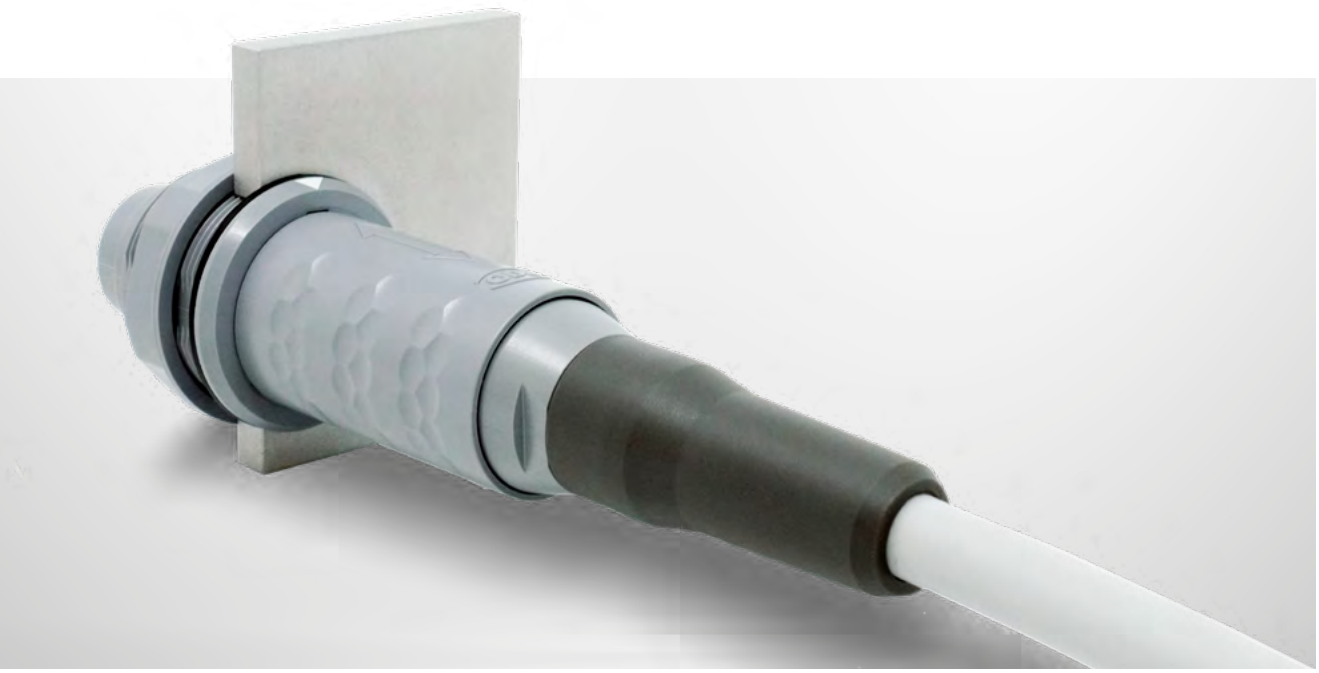

All shown connectors and cable assemblies are defined without breaking capacity (COC) according to IEC 61984:2008 (VDE 0627:2009-11).

Unless otherwise explicitly stated (for example: mains and high voltage), all shown connectors are rated to safety extra low voltage (SELV) of less than 50 V AC / 75 V DC, according to IEC 61140:2016 (VDE 0140-1:2016-11).
For more details, please refer to page 110.
ODU MEDI-SNAP® has UL recognition as described under file E110586.

Issue: 2023-05

All dimensions are in mm.
Some figures are for illustrative purposes only. Subject to change without notice. Errors and omissions excepted. We reserve the right to change our products and their technical specifications at any time in the interest of technical improvement. This publication supersedes all prior publications.

This publication is also available as a PDF file that can be downloaded from www.odu-connectors.com

TABLE OF CONTENTS

Clickable page numbers

ODU MEDI-SNAP®

PRODUCT INFORMATION

ODU MEDI-SNAP® AT A GLANCE

ODU MEDI-SNAP® PLASTIC & METAL	Coding	Size	No. of possible mechanical codings	Plug diameter in mm	Max. cable diameter in mm	Number of max. contacts	Solder	Crimp	PCB	IP protection degree IEC 60529:1989 in mated condition	IP protection degree IEC 60529:1989 in unmated condition	Housing material	From page
	Pin and groove	1	Plastic 6	Plastic 13.7	6.5	14	•	•	•	Up to IP67	Up to IP68	PSU PEI	23
			Metal 3	Metal 14.0								Brass	
	Pin and groove	2	Plastic 3	Plastic 18.5	9.2	26	•		•	Up to IP64	IP50	PSU PEI	59
	Pin and groove	3.5	Plastic 3	Plastic 23.0	10.5	41	•		•	Up to IP68	Up to IP68	PEI	83

SUPPORT IN COMPLYING WITH THE LEGAL REQUIREMENTS FOR MEDICAL DEVICES

- Technical documentation
- Risk management
- Change management
- Management of CMR substances
- Continuous traceability
- Retention period for technical documents
- Supplier management

Table of contents

PUSH-PULL LOCKING FUNCTIONALITY

The proven push-pull locking ensures establishing connections easily in less than a second. It is **self-securing** – this means that an accidental release by pulling on the cable can be ruled out.
During the mating process, the connector's locking claws will lock into place in the corresponding grooves in the receptacle and form a dependable connection between the connector and the receptacle. Consequently, when the connection is properly established, an unintentional demating of the connection by pulling on the cable cannot take place. The connection can only be released deliberately, by just pulling back the connector's outer sleeve.

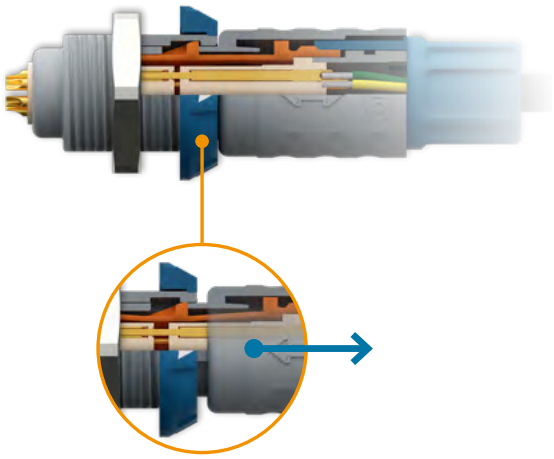

BREAK-AWAY FUNCTIONALITY

The efficient break-away locking allows an easy mating and demating of connections within fractions of a second just like the Push-Pull locking. But furthermore it also features an **emergency release** which enables demating the connection when needed by pulling on the cable. During mating, the connector's locking claws will lock into place in the corresponding grooves in the receptacle and form a dependable connection between the connector and the receptacle. The sloping shape of the locking claws ensures the "breaking away" of the connection when the connector or cable is pulled with a defined force.

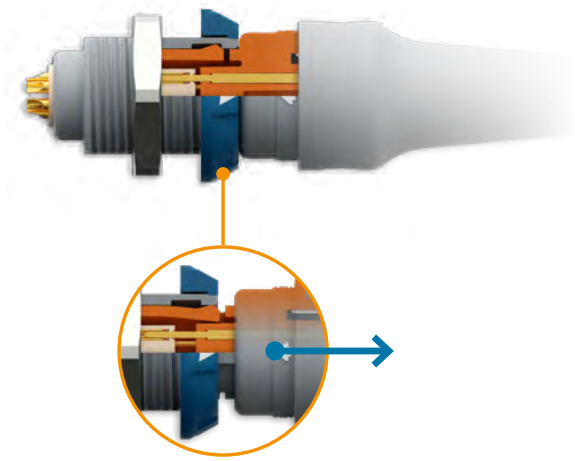

PRODUCT FEATURES AT A GLANCE

APPLICATIONS AND MATERIALS

The ODU MEDI-SNAP® housings are available in PSU, PEI and brass. Standard color for the housings is Gray or Black. Additional colors for the housings are available in PSU, upon request. Color codings are available with up to 8 different colors.

The flexibility of the ODU MEDI-SNAP® series allows adaptation to suit a wide range of requirements in medical and industrial applications as well as in the digital measurement and testing sector.

Under general application conditions, the temperature range of the ODU MEDI-SNAP® connectors is between –50 °C and a maximum of +120 °C, even up to +134 °C in the case of autoclavable connectors (see page 121). For cable assemblies, please also consider the temperature range of the cable and overmolding (see page 19) .

IEC 60601-1:2005 (3RD EDITION)

Technical specification of connector only

The technical requirements stated in the IEC 60601-1:2005 refer almost exclusively to protection from electrical shock. In order to reduce the risk as much as possible for the patient as well as for the operator, the plastic version of ODU MEDI-SNAP® offers you maximum safety due to

- Up to 4 kV AC test voltage to conductive components and therefore two means of patient protection (2MOPP)[1]
- Protection from electrical discharge (ESD) up to ±15 kV (air discharge)
- Protection from electrical shock (socket inserts only) in unmated condition due to the design (test finger proof)

For further information on IEC 60601-1 see page 118 ff.

[1] Working voltage of medical device max. 250V AC (degree of pollution 2)

TURNED CONTACTS

Turned contacts are available in diameter 0.5 mm to 2 mm in the following termination types:

Solder, crimp and PCB

Mating cycles	min. 5.000
Material	Brass
Plating	Gold

STANDARD PIN AND SOCKET CONTACTS

Information on diameters, termination types and current carrying capacity can be found after in the section after the inserts.


10 59
EKG
65
VES 0
ST AUS
SpO2
97
PR 90
PI 2.81 Quelle SpO2
NIBP
10:02
Manuell
135/75
(95)
Messung abgeschl.
Trend
Hauptmenü
3838

ODU MEDI-SNAP®

CONFIGURATION GUIDELINE

Connector and cable assembly configuration – step by step

STEP BY STEP TO THE PERFECT CONNECTION

ODU offers high-quality connectors and comprehensive services for the complete assembly. From connectors to watertight potting, we provide the complete system from a single source.

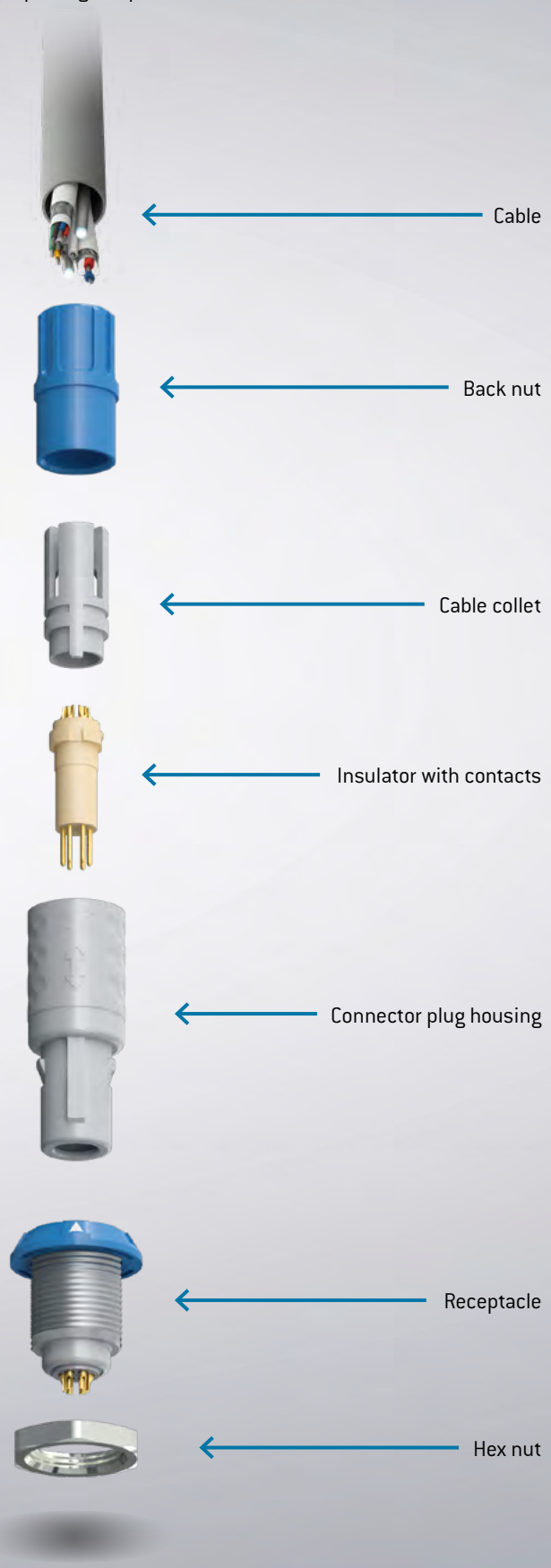

YOUR WAY TO AN INDIVIDUAL CONNECTION:

HOW TO CONFIGURE WITH THE PART NUMBER KEY.

This shows you how ODU's part number key is composed. In the first part of the configuration, select the connector plug housing (such as style and size) of the connector. In the middle part of the part number key, you configure the contact insert and then the cable entry.

Type
A = Break-away connector
G = Receptacle
K = In-line receptacle
S = Plug
W = Right-angled plug

Insulator material
P = PEEK (standard)
T = PBT

Cable collet system

Style
1–9, A, E, K

Size
1, 2
B = Size 3.5

Series
MEDI-SNAP®

Coding

Housing material
7 / 8
G / S / C

Contact insert
e. g. 2 contacts = 02

Contact type / surface

Contact diameter / termination cross-section

Color coding

Back nut
(Cable bend relief)

1	2	3	4	5	6	7	8	9	10	11	12	13	14	15	16	17	18	19
S	1	1	M	0	7	–	P	1	4	M	C	C	0	–	6	5	6	0

Connector plug housing
Size 1: p.26 ff. / size 2: p.62 ff. / size 3.5: 86 ff.

Contact insert
Size 1: p.46 ff. / size 2: p.72 ff. / size 3.5: p.92 ff.

Cable entry
Size 1: p.53 ff. / size 2: p.78 ff./ size 3.5: p.94 ff.

CONNECTOR CONFIGURATION – STEP BY STEP

The perfect product for you in just a few steps. These step-by-step instructions show how to configure your own individual product with the ODU part number key based on a sample configuration.

Connector in style 1 / size 1 / series ODU MEDI-SNAP® / coding 0° / connector plug housing plastic, Gray / insulator PEEK / 14 contacts / pin (solder) Au / termination cross-section AWG 28 / cable diameter 5.3–6.5 mm / standard back nut in the color Blue

1. STEP: SERIES (SEE POSITION 4)

1	2	3	4	5	6	7	8	9	10	11	12	13	14	15	16	17	18	19
			M			–								–				

MEDI-SNAP®

2. STEP: STYLE (SEE POSITIONS 1, 2 AND 19)

SEE P. 26

1	2	3	4	5	6	7	8	9	10	11	12	13	14	15	16	17	18	19
S	1		M			–								–				0

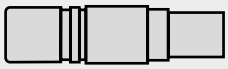

STYLE S1 WITH STANDARD BACK NUT

3. STEP: SIZE (SEE POSITION 3)

SEE P. 24

1	2	3	4	5	6	7	8	9	10	11	12	13	14	15	16	17	18	19
S	1	1	M			–								–				0

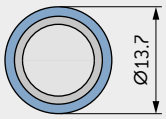

SIZE 1

4. STEP: CODING (SEE POSITION 5)

SEE P. 44

1	2	3	4	5	6	7	8	9	10	11	12	13	14	15	16	17	18	19
S	1	1	M	0		–								–				0

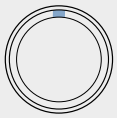

CODING 0°

5. STEP: HOUSING MATERIAL (SEE POSITION 6)

SEE P. 45

1	2	3	4	5	6	7	8	9	10	11	12	13	14	15	16	17	18	19
S	1	1	M	0	7	–								–				0

PSU Gray

PLASTIC, GRAY

6. STEP: INSULATOR MATERIAL (SEE POSITION 8)

1	2	3	4	5	6	7	8	9	10	11	12	13	14	15	16	17	18	19
S	1	1	M	0	7	–	P							–				0

PEEK

7. STEP: CONTACT INSERT (SEE POSITIONS 9 AND 10)

SEE P. 46

1	2	3	4	5	6	7	8	9	10	11	12	13	14	15	16	17	18	19
S	1	1	M	0	7	–	P	1	4					–				0

14 CONTACTS

8. STEP: CONTACT TYPE / SURFACE (SEE POSITION 11)

1	2	3	4	5	6	7	8	9	10	11	12	13	14	15	16	17	18	19
S	1	1	M	0	7	–	P	1	4	M				–				0

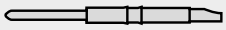

SOLDER (PIN)

9. STEP: CONTACT DIAMETER (SEE POSITION 12)

1	2	3	4	5	6	7	8	9	10	11	12	13	14	15	16	17	18	19
S	1	1	M	0	7	–	P	1	4	M	C			–				0

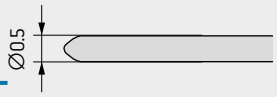

DIAMETER 0.5 mm

10. STEP: TERMINATION CROSS-SECTION (SEE POSITIONS 13 AND 14)

1	2	3	4	5	6	7	8	9	10	11	12	13	14	15	16	17	18	19
S	1	1	M	0	7	–	P	1	4	M	C	C	0	–				0

AWG 28

11. STEP: CABLE COLLET SYSTEM (SEE POSITIONS 16 AND 17)

1	2	3	4	5	6	7	8	9	10	11	12	13	14	15	16	17	18	19
S	1	1	M	0	7	–	P	1	4	M	C	C	0	–	6	5		0

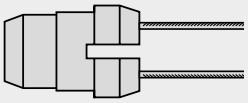

MIN. CABLE DIAMETER 5.3 mm
MAX. CABLE DIAMETER 6.5 mm

12. STEP: COLOR STANDARD BACK NUT (SEE POSITION 18)

SEE P. 45

1	2	3	4	5	6	7	8	9	10	11	12	13	14	15	16	17	18	19
S	1	1	M	0	7	–	P	1	4	M	C	C	0	–	6	5	6	0

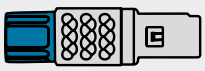

BLUE

YOUR WAY TO AN INDIVIDUAL CABLE ASSEMBLY SOLUTION

HOW TO CONFIGURE WITH THE CABLE NUMBER KEY

This shows you how ODU's cable number key is composed. In the first part of the configuration – after the "C" for cable, please insert the first 6 positions of your connector number key.
In the middle part of the cable number key, you configure the bend relief, color and count number.
The last 6 positions determine the length of the cable in mm.

Cable assembly

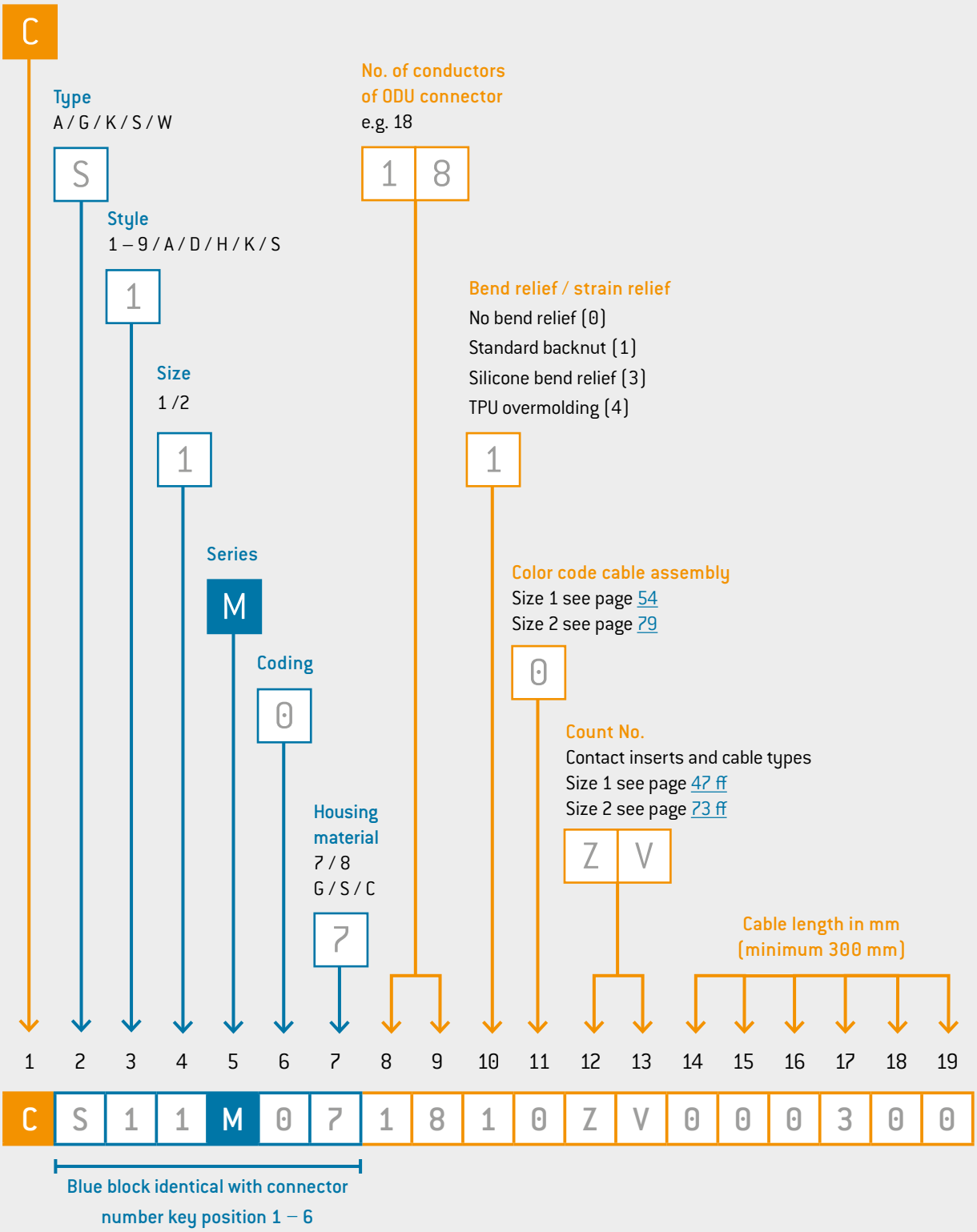

CABLE SPECIFICATIONS
TECHNICAL DATA

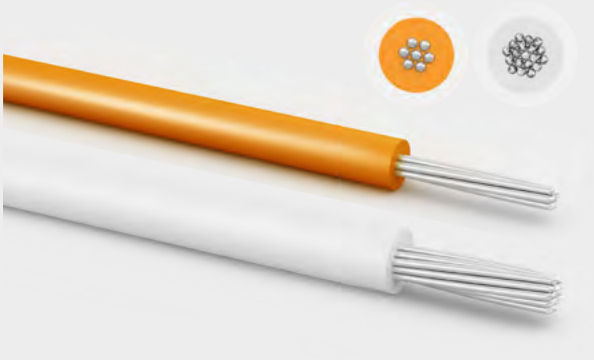

SINGLE WIRE PVC
UL-STYLE 1061 / 10002 | UL-STYLE 1007 / 1569 | UL-STYLE 1015

Conductor	TPC – tin plated copper acc. to EN 13602:2013
Insulation	UL-PVC semi-rigid (UL-Style 1061 / 10002) UL-PVC 105 °C (UL-Style 1007 / 1569 & 1015)
Temperature range	–10 up to +105 °C
Test voltage	1,500 V RMS (UL-Style 1061 / 10002) 2,000 V RMS (UL-Style 1007 / 1569) 6,000 V RMS (UL-Style 1015)
Operating voltage	300 V RMS (UL-Style 1061 / 10002 & 1007 / 1569) 600 V RMS (UL-Style 1015)

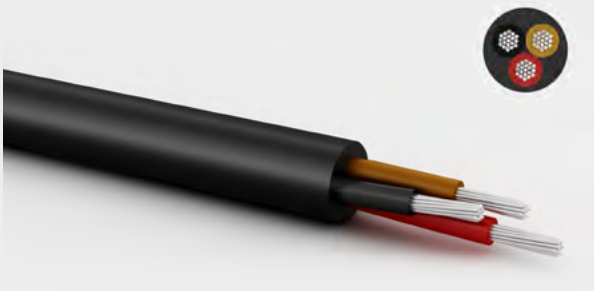

MULTI-CONDUCTOR CABLES PVC BLACK – UNSCREENED
UL / cUL – LIYY STYLE 2464 / 2517-10002

Conductor	TPC – tin plated copper acc. to EN 13602:2013
Insulation	UL-PVC semi-rigid (core) UL-PVC 105 °C (jacket)
Temperature range	–10 up to +80 °C (style 2464)
Test voltage	1,500 V RMS
Operating voltage UL	300 V RMS

MULTI-CONDUCTOR CABLES PVC WHITE – UNSCREENED
UL-STYLE 2464

Conductor	TPC – tin plated copper
Insulation	SR-PVC
Temperature range	–10 up to +80 °C
Test voltage	1.500 V RMS
Operating voltage UL	300 V RMS

COAXIAL CABLES PVC BLACK
WITHOUT UL APPROVAL

Conductor	STAKU – conductor blank
Insulation	PVC
RG Type	RG 174
Impedance	50 Ohm
Shielding	Copper braid shield
Temperature range	–10 up to +80 °C

OVERMOLDING SPECIFICATIONS
TECHNICAL DATA

OVERMOLDING

Material	TPU
Color	Black, Gray
Operating temperature	–40 up to +85°C

SILICONE-OVERMOLDING

- New surface with unique haptics – no stick-slip effect
- Up to 500 autoclave cycles
- Bend protection thanks to special shape of overmolding
- Approved LSR and HTV processes available
- Maximum alternating bending strength
- Halogen- and latex-free

PREVENTION OF THE STICK-SLIP EFFECT

AUTOCLAVABILITY

BEND PROTECTION AND SMOOTHLY TRANSITIONING OVERMOLDING

Table of contents

CABLE ASSEMBLY

- One point of contact for a complete system
- High technical expertise in the processing of third-party products
- 100 % final inspection
- Custom labeling and cable printing
- Close collaboration with leading cable manufacturers
- Process-controlled solder and crimp monitoring from initial samples to full production
- Cleanroom production possible in accordance with ISO 14644-1:2015-12
- Production in accordance with UL possible (File: E333666)
- Inhouse Technology Test Center for the development of technologies for customer-specific requirements
- Production based on IPC standards

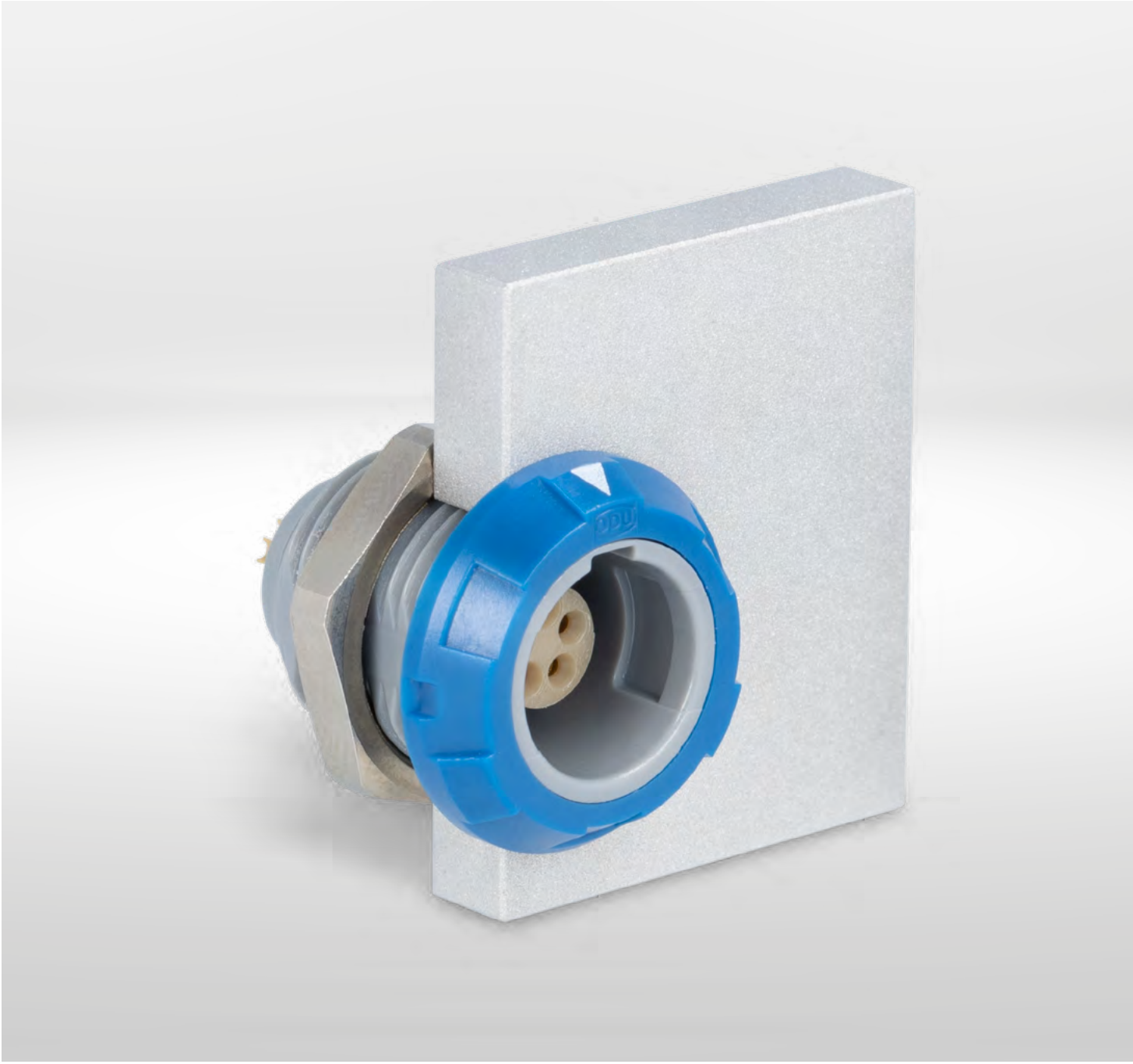

ODU MEDI-SNAP®

ODU MEDI-SNAP® WITH PLASTIC / METAL HOUSINGS SIZE 1

ODU MEDI-SNAP® PLASTIC / METAL HOUSING SIZE 1 – SUMMARY

The ODU MEDI-SNAP® with plastic housing in size 1 is coded by pin and groove. These circular connectors can have a variety of configurations: numerous styles of connectors, receptacles and in-line receptacles as well as various termination types, contact inserts and color codings.

- Coding over pin and groove
- 8 color codings
- 6 mechanical codings
- 2 – 14 contacts
- 3 termination types
- Contacts for solder, crimp and PCB termination
- A selection of numerous connectors as well as receptacles and in-line receptacles
- IP50 / IP64 and IP67 available in mated condition
- Up to 5,000 mating cycles

STRAIGHT PLUG – PUSH-PULL

P. 26

2,000 mating cycles

IP50

PL

MT

S 1

IP50

PL

MT

S 2

IP64

PL

MT

S 4

RIGHT-ANGLED PLUG – PUSH-PULL

P. 28

2,000 mating cycles

IP50

W 1

PL

W 2

BREAK-AWAY PLUG

P. 30

5,000 mating cycles

IP67

PL

A 5

PL Plastic MT Metal

For assembly instructions, please refer to our website: www.odu-connectors.com/downloads/assembly-instructions

IN-LINE RECEPTACLE

P. 32

5,000 mating cycles

IEC 60601-1: 2 MOOP[1] and 1 MOPP[1] (Plastic only)

IP50

PL		K 1	
MT	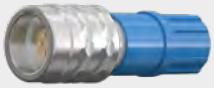	K 5	on request
PL		K 2	
MT		K 6	on request

RECEPTACLE

P. 34

5,000 mating cycles

IEC 60601-1: 2 MOOP[1] and 1 MOPP[1] (Plastic only)

IP50

PL		G 1	
MT			
PL		G 5	
MT			
PL		G 6	on request
PL		G 8	
MT		G K	

RECEPTACLE

P. 40

5,000 mating cycles

IEC 60601-1: 2 MOOP[1] and 2 MOPP[1] (Plastic only)

IP64
IP67

PL		G 4	

IP50

PL		G 9	

IP64
IP67
IP68[2]

PL		G A	

IP67
IP68[2]

MT			

[1] As per IEC 60601-1:2012 (VDE 0750-1:2013-12).
Max working voltage of the medical device 250 V AC (degree of pollution 2).
Valid for plastic receptacles in combination with plastic plugs only.
All cable assemblies with plastic connectors in the catalog fulfill 1MOOP/1MOPP.
To ensure the required clearance and creepage distance in the termination area of plug style A5, a corresponding potting sleeve must be used (not included in the scope of delivery).
[2] IP68 in unmated condition with respect to the device

For further information on
IEC 60601-1
see page 118 ff.

STRAIGHT PLUG

Push-pull styles

S 1 0

STYLE: 1

IP50

With standard back nut

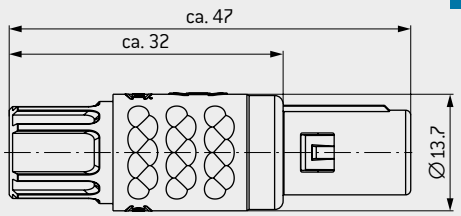

PL

1 0

STYLE: 1

IP50

With standard back nut

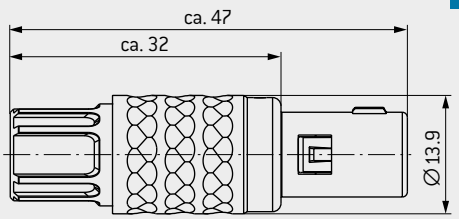

MT

2 S
4

STYLE: 2 / 4

S2: IP50 / S4: IP64

With back nut[1] for cable bend relief[2]

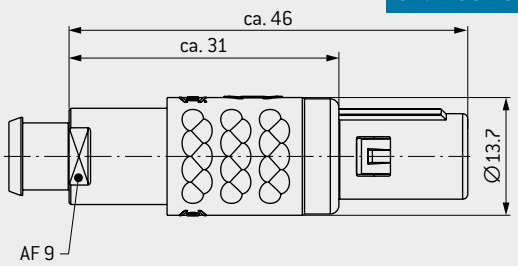

PL

2 S
4

STYLE: 2 / 4

S2: IP50 / S4: IP64

With back nut[1] for cable bend relief[2]

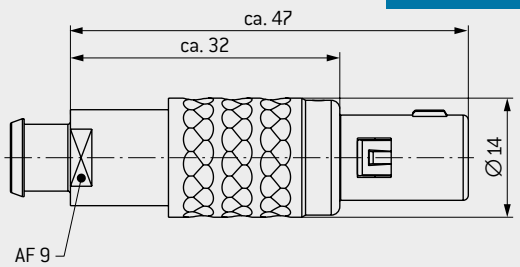

MT

1	2	3	4	5	6	7	8	9	10	11	12	13	14	15	16	17	18	19
S		1	M			–	P							–				

TECHNICAL DATA

- Contact configuration see page 46 ff.
- Mechanical and color coding see page 44 ff.
- Cable collet diameter see page 53.
- Housing material and color see page 45.
- Accessories see page 54 ff.
- IP rate in mated condition and depending on the mating receptacle

[1] Back nuts for cable bend reliefs have to be ordered in the same color as the connector housing. The color coding is based on the cable bend relief. [2] Cable bend reliefs have to be ordered separately (see page 54).

CABLE ASSEMBLY – STRAIGHT PLUG

S 1 1

STYLE: 1 With standard back nut

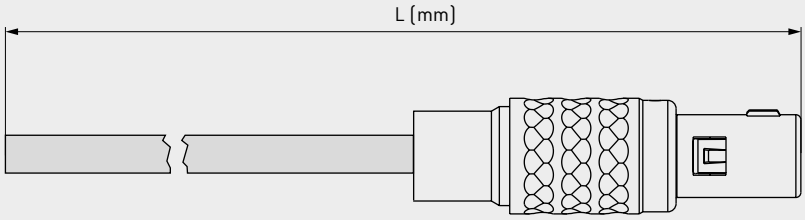

2 3
4

STYLE: 2 / 4 With silicone bend relief

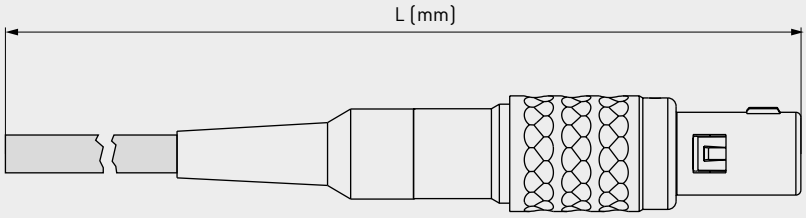

2 4
4

STYLE: 2 / 4 With TPU overmolding

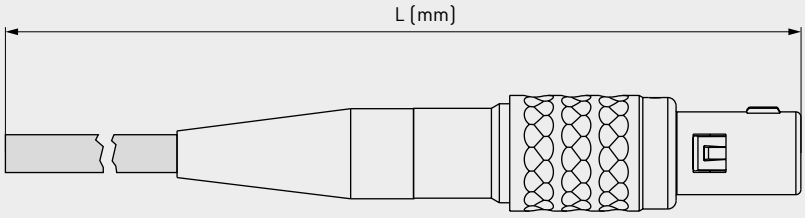

L (mm)

1	2	3	4	5	6	7	8	9	10	11	12	13	14	15	16	17	18	19
C	S		1	M														

RIGHT-ANGLED PLUG

Push-pull styles

W 1 0

STYLE: 1

IP50

With standard back nut

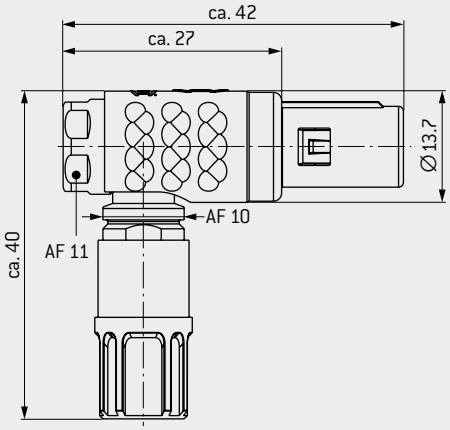

PL

2 S

STYLE: 2

IP50

With back nut[1] for cable bend relief[2]

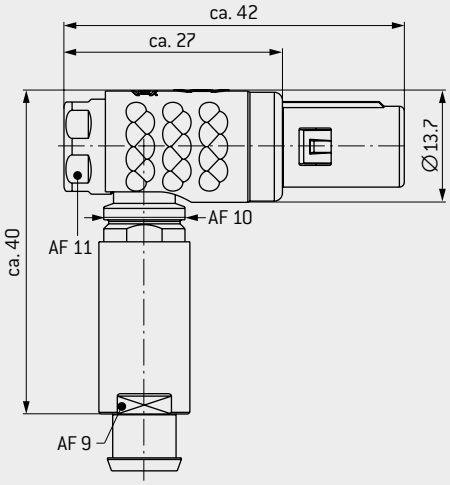

PL

TECHNICAL DATA

- Contact configuration see page 46 ff.
- Mechanical and color coding see page 44 ff.
- Cable collet diameter see page 53.
- Housing material and color see page 45.
- Accessories see page 54 ff.
- IP rate in mated condition and depending on the mating receptacle

1	2	3	4	5	6	7	8	9	10	11	12	13	14	15	16	17	18	19
W		1	M			–	P							–				

[1] Back nuts for cable bend reliefs have to be ordered in the same color as the connector housing. The color coding is based on the cable bend relief. [2] Cable bend reliefs have to be ordered separately (see page 54).

CABLE ASSEMBLY – RIGHT-ANGLED PLUG

W 1 1

STYLE: 1 With standard back nut

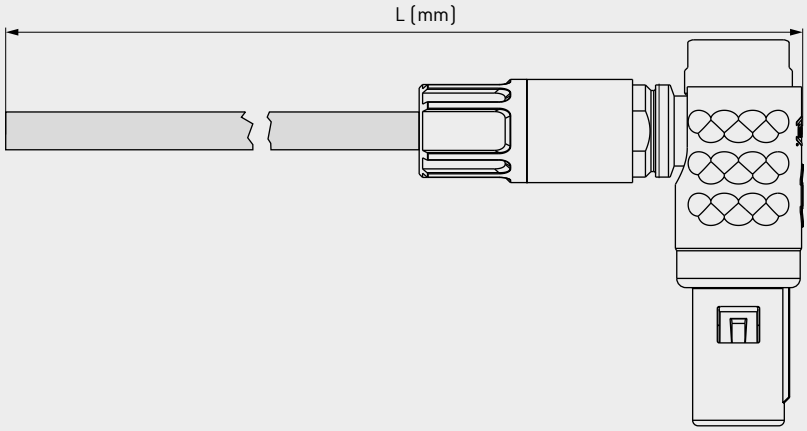

2 3

STYLE: 2 With silicone bend relief

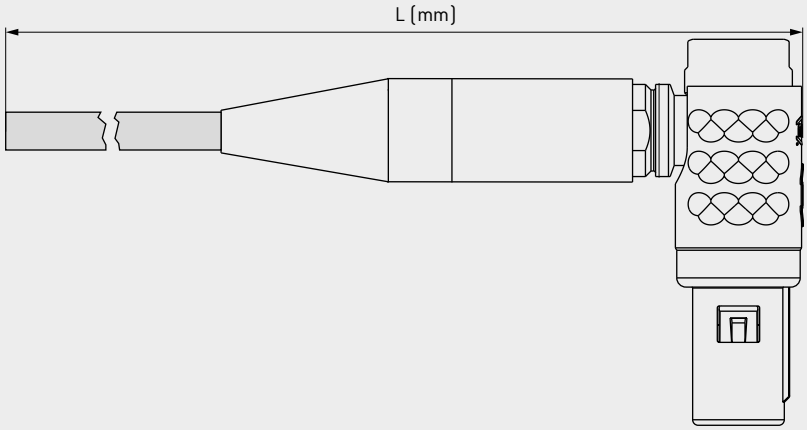

L (mm)

1	2	3	4	5	6	7	8	9	10	11	12	13	14	15	16	17	18	19
C	W		1	M														

BREAK-AWAY PLUG

Break-away styles

A 5

STYLE: 5 IP67

Suitable for overmolding (without cable outlet)

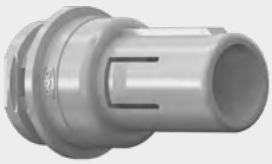

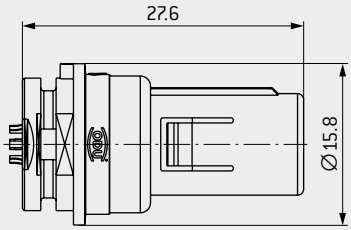

PL

TECHNICAL DATA

- Contact configuration see page 46 ff.
- Mechanical and color coding see page 44 ff.
- Housing material and color see page 45.
- Accessories see page 54 ff.
- IP rate in mated condition and depending on the mating receptacle
- Housing and insulator moulded in one piece
- Not mateable with metal receptacles

1	2	3	4	5	6	7	8[1]	9	10	11	12	13	14	15	16	17	18	19
A	5	1	M			–	0							–	0	0	0	0

[1] In the case of this style, the connector housing as well as the insulator are made of the housing material PSU.

CABLE ASSEMBLY – BREAK-AWAY PLUG

A 5 4

STYLE: 5 With TPU overmolding

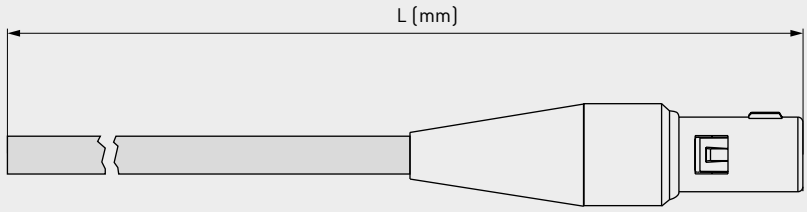

L (mm)

1	2	3	4	5	6	7	8	9	10	11	12	13	14	15	16	17	18	19
C	A	5	1	M					4									

IN-LINE RECEPTACLE

Suitable for creating a cable to cable connection

K 1 0

STYLE: 1

IP50

With standard back nut

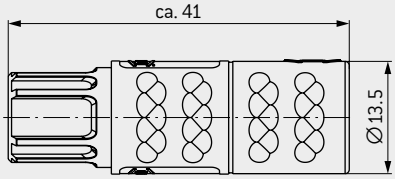

PL

5 0

STYLE: 5

ON REQUEST

IP50

With standard back nut

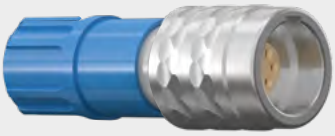

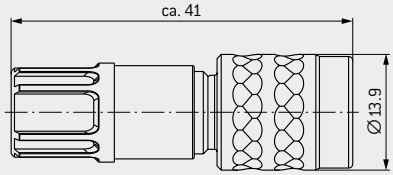

MT

2 S

STYLE: 2

IP50

With back nut[1] for cable bend relief[2]

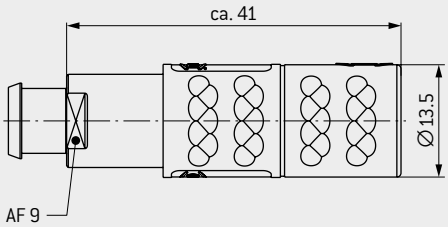

PL

6 S

STYLE: 6

ON REQUEST

IP50

With back nut[1] for cable bend relief[2]

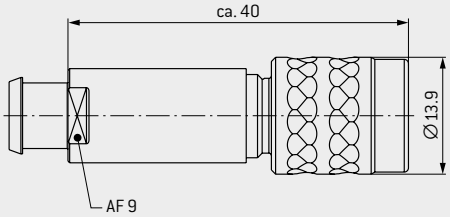

MT

TECHNICAL DATA

- Contact configuration see page 46 ff.
- Mechanical and color coding see page 44 ff.
- Cable collet diameter see page 53.
- Housing material and color see page 45.
- Accessories see page 54 ff.
- IP rate in mated condition

1	2	3	4	5	6	7	8	9	10	11	12	13	14	15	16	17	18	19
K		1	M			–	P							–				

[1] Back nuts for cable bend reliefs have to be ordered in the same color as the connector housing. The color coding is based on the cable bend relief. [2] Cable bend reliefs have to be ordered separately (see page 54).

CABLE ASSEMBLY – IN-LINE RECEPTACLE

K 1 1

5

STYLE: 1 / 5 With standard back nut

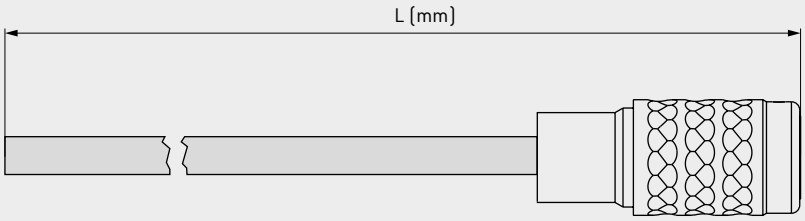

2 3

6

STYLE: 2 / 6 With silicone bend relief

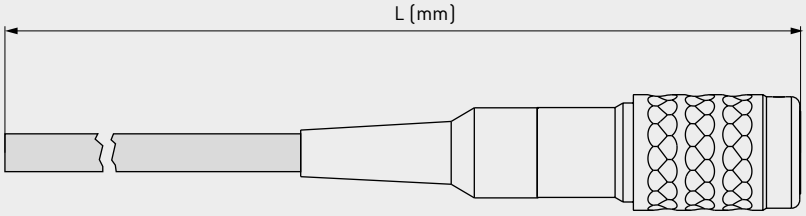

4

STYLE: 2 / 6 With TPU overmolding

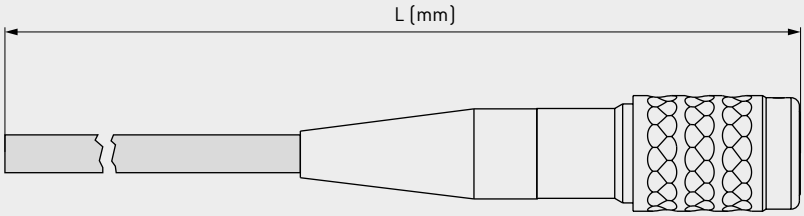

L (mm)

1	2	3	4	5	6	7	8	9	10	11	12	13	14	15	16	17	18	19
C	K		1	M														

RECEPTACLE

G 6

STYLE: 6 ON REQUEST **IP50**

With strain relief, suitable for front and rear installation

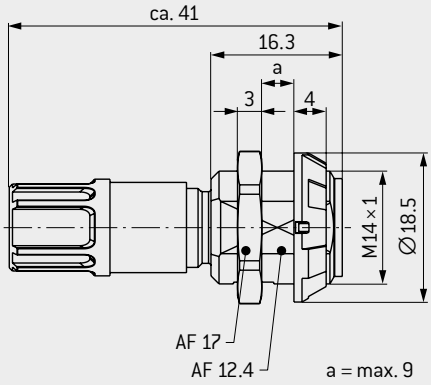

PL

PANEL CUT-OUT

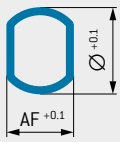

AF : 12.5 mm
Ø : 14.1 mm

TECHNICAL DATA

- Contact configuration see page 46 ff.
- Mechanical and color coding see page 44 ff.
- Housing material and color see page 45.
- Cable collet diameter see page 53.
- IP50 in mated condition
- IP50 with respect to the end device

1	2	3	4	5	6	7	8	9	10	11	12	13	14	15	16	17	18	19
G	6	1	M			–	P							–				0

CABLE ASSEMBLY – RECEPTACLE

G 6 1

STYLE: 6 With standard back nut

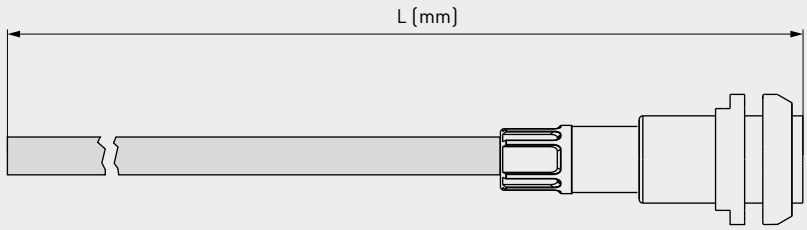

L (mm)

1	2	3	4	5	6	7	8	9	10	11	12	13	14	15	16	17	18	19
C	G	6	1	M					1									

RECEPTACLE

G 1

STYLE: 1

IP50

For front panel installation

PL

MT

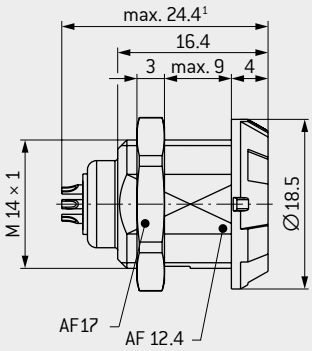

PANEL CUT-OUT

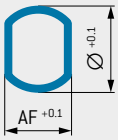

AF : 12.5 mm
Ø : 14.1 mm

5

STYLE: 5

IP50

Receptacle with continuous thread, can be installed from front or rear; extension in front of panel is adjustable

PL

MT

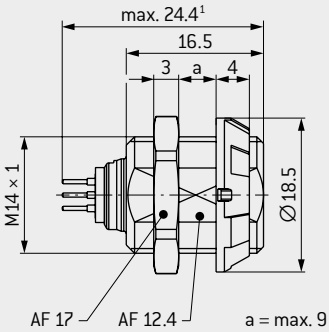

PANEL CUT-OUT

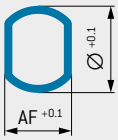

AF : 12.5 mm
Ø : 14.1 mm

TECHNICAL DATA

- Contact configuration see page 46 ff.
- PCB layouts see page 52.
- Mechanical and color coding see page 44 ff.
- Housing material and color see page 45.
- No color coding for metal receptacle style G1 possible
- IP50 in mated condition
- IP50 with respect to the end device

Metal version style 1, default "C"

1	2	3	4	5	6	7	8	9	10	11	12	13	14	15	16	17	18	19
G		1	M			–	P							–		0		0

[1] Depending on the insert

CABLE ASSEMBLY – RECEPTACLE

G 1 0
5

STYLE: 1 / 5 No bend relief

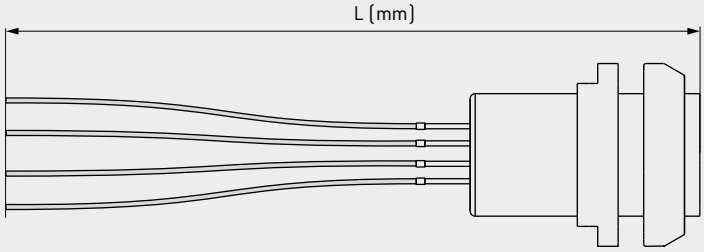

L (mm)

1	2	3	4	5	6	7	8	9	10	11	12	13	14	15	16	17	18	19
C	G		1	M					0									

RECEPTACLE

G 8

STYLE: 8

IP50

For rear panel installation

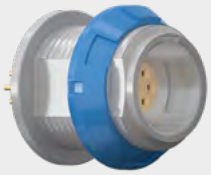

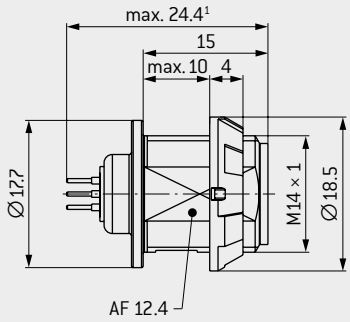

PL

PANEL CUT-OUT

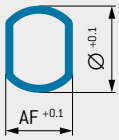

AF : 12.5 mm
Ø : 14.1 mm

K

STYLE: K

IP50

For rear panel installation

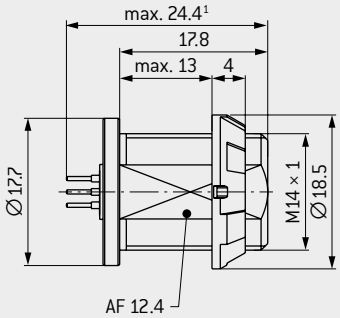

MT

PANEL CUT-OUT

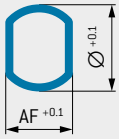

AF : 12.5 mm
Ø : 14.1 mm

TECHNICAL DATA

- Contact configuration see page 46 ff.
- PCB layouts see page 52.
- Housing material and color see page 45.
- Mechanical and color coding see page 44 ff.
- IP50 in mated condition
- IP50 with respect to the end device

1	2	3	4	5	6	7	8	9	10	11	12	13	14	15	16	17	18	19
G		1	M			–	P							–				0

[1] Depending on the insert

CABLE ASSEMBLY – RECEPTACLE

G 8 0
K

STYLE: 8 / K No bend relief

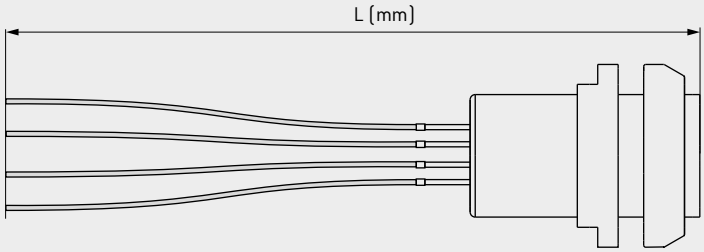

L (mm)

1	2	3	4	5	6	7	8	9	10	11	12	13	14	15	16	17	18	19
C	G		1	M					0									

RECEPTACLE

G | 4

STYLE: 4

For front panel installation

IP64/67

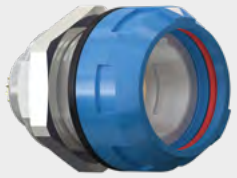

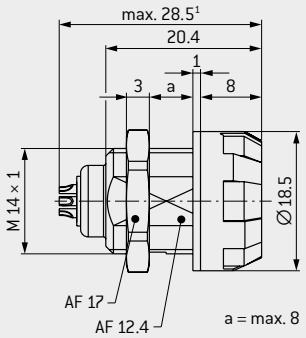

PL

PANEL CUT-OUT

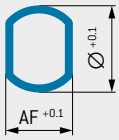

AF : 12.5 mm
Ø : 14.1 mm

TECHNICAL DATA

- Contact configuration see page 46 ff.
- Mechanical and color coding see page age 44 ff.
- Housing material and color see page 45.
- Style 4 color coding via front nut
- IP64 in mated condition with push-pull plug style S4
- IP67 in mated condition with break-away plug
- IP50 with respect to the end device in unmated condition

1	2	3	4	5	6	7	8	9	10	11	12	13	14	15	16	17	18	19
G	4	1	M			–	P							–				0

[1] Depending on the insert

CABLE ASSEMBLY – RECEPTACLE

G 4 0

STYLE: 4 No bend relief

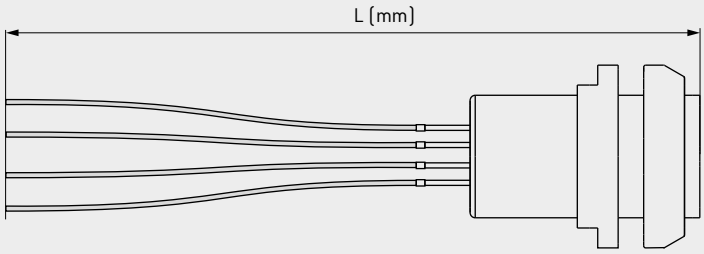

L (mm)

1	2	3	4	5	6	7	8	9	10	11	12	13	14	15	16	17	18	19
C	G	4	1	M					0									

RECEPTACLE

G 9

STYLE: 9

IP50

For front panel installation

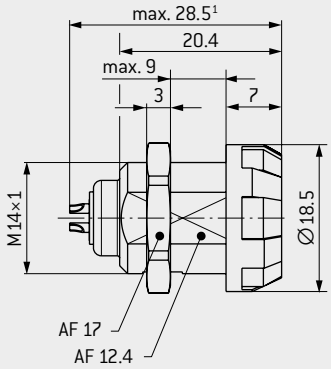

PL

PANEL CUT-OUT

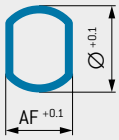

AF : 12.5 mm
Ø : 14.1 mm

TECHNICAL DATA

- Contact configuration see page 46 ff.
- IP50 in mated condition
- IP50 with respect to the end device
- Housing material and color see page 45.
- Available in Black or Gray (further colors on request)

A

STYLE: A

IP64/67/68

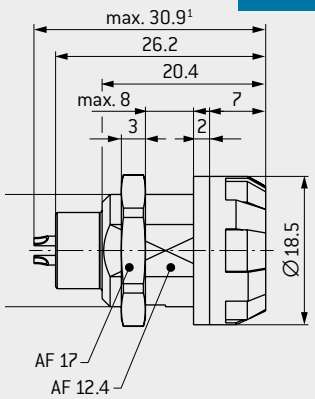

PL

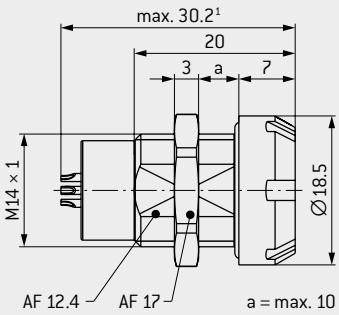

MT

PANEL CUT-OUT

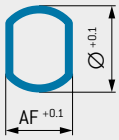

AF : 12.5 mm
Ø : 14.1 mm

TECHNICAL DATA

- Contact configuration see page 46 ff.
- Housing material and color see page 45.
- Plastic version available in Black or Gray (further colors on request)
- IP64 in mated condition with push-pull plug style S4
- IP67 in mated condition with break-away plug (only mateable with plastic receptacle)
- IP68 with respect to the end device in unmated condition
- Solder contacts only

Style 9 and plastic version A needs "0"
Metal version "C"

1	2	3	4	5	6	7	8	9	10	11	12	13	14	15	16	17	18	19
G		1	M			–	P							–				0

[1] Depending on the insert

CABLE ASSEMBLY – RECEPTACLE

G 9 0
A

STYLE: 9 / A No bend relief

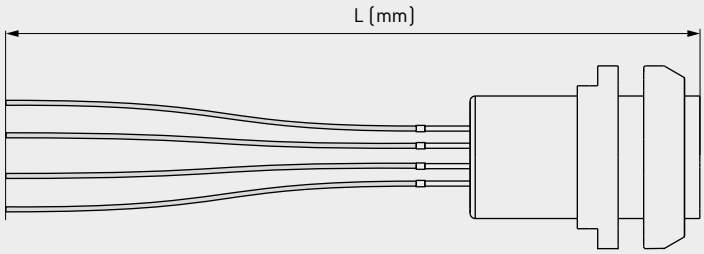

L (mm)

1	2	3	4	5	6	7	8	9	10	11	12	13	14	15	16	17	18	19
C	G		1	M					0									

MECHANICAL CODING

	Angle	Receptacle front view	Plastic			Metal	
			Push-pull plug	Break-away plug	Receptacle	Push-pull plug	Receptacle
0	0°		●	●	●	●	●
A	40°		●	●	●	●	●
C	60°		●	●	●	●	●
E	80°		●	●	●	○	○
H	170°		●	●	●	○	○
J	205°		●	●	●	○	○

● Standard
○ On request

1	2	3	4	5	6	7	8	9	10	11	12	13	14	15	16	17	18	19
		1	M			–								–				

HOUSING MATERIAL AND COLOR CODING

For autoclaving, choose PEI for push-pull plugs or PSU for break-away plugs.
All receptacles and color codings are autoclavable.

Color (similar classic RAL)	Material [1]	Housing material				Color coding		
		Push-pull plug	Break-away plug	Receptacle		Plug back nut	Receptacle front nut	
Gray (7045)	PSU	●	● autoclavable	●	7	●	●	7
Gray (7045)	PEI	● autoclavable	–	●	G	●	●	7
Black (9004)	PSU	●	● autoclavable	●	8	●	●	8
Black (9004)	PEI	● autoclavable	–	●	S	●	●	8
Chrome matt	Brass	●	–	●	C	●	●	C[3]
Red (3002)	PSU	○	○	○	2	●	●	2
White (9003)	PSU	○	○	○	3	●	●	3
Yellow (1016)	PSU	○	○	○	4	●	●	4
Green (6032)	PSU	○	○	○	5	●	●	5
Blue (5019)	PSU	○	○	○	6	●	●	6
Orange (2003)	PSU	○	○	○	9	○	○	9

● Standard
○ On request

For more detailed information on the topic of "autoclaving" see page 121

[1] For information about biocompatible materials, please contact sales@odu-de
[2] Back nuts for cable bend relief have to be ordered in the same color as the connector housing. Please order bend relief separately.
[3] Only for metal version

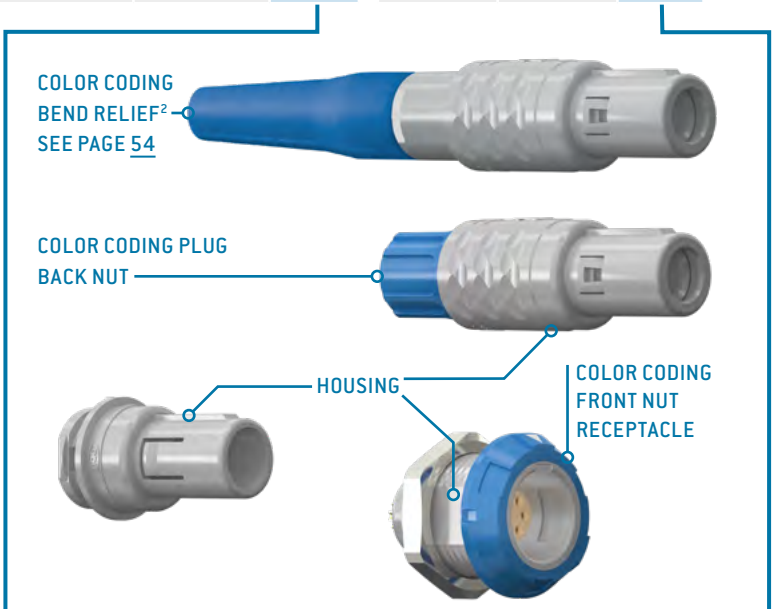

1	2	3	4	5	6	7	8	9	10	11	12	13	14	15	16	17	18	19
		1	M			–								–				

CONTACT INSERT

For push-pull plugs and receptacles
For break-away plug A5, see page 50

All working voltages, unless otherwise stated: < 50 V AC / < 75 V DC
Please refer to Technical Information for further information and also for cases where a higher voltage is needed.

Number of contacts		Contact type: Termination	Socket	Pin	Part number key insert	Contact style	Contact diameter mm	Single contact nominal current[1] A	Nominal current insert A	Clearance and creepage distance contact to contact mm	Test voltage[2] EIA kV RMS	Termination diameter mm	Termination cross-section AWG	Termination cross-section mm²	View on termination area: Pin piece	Socket piece
0	2	Solder	L	M	P N 0	0	1.3	15.0	15.0	1.00	1.400	1.40	18	1.00		
					P H 0			12.0	12.0	1.30		1.10	20	0.50		
		Print straight[4]	Q	–	P 0 0							0.70	–	–		
		Angled[4]				A						0.80	–	–		
0	3[5]	Solder	L	M	P N 9	0	1.3	15.0	15.0	0.90	1.600	1.40	18	1.00		
					P H 9			12.0	12.0	1.20		1.10	20	0.50		
		Print straight[4]	Q	–	P 0 9							0.70	–	–		
		Angled[4]				A						0.80	–	–		
0	4	Solder	L	M	J H 0	0	0.9	10.0	10.0	0.90	1.300	1.10	20	0.50		
					J G 0			7.5	7.5	1.20		0.85	22	0.38		
		Crimp[3]	N	P	J H 0			10.0	10.0	0.90		–	20–24	0.50–0.25		
					J G 0			7.5	7.5	1.20		–	22–26	0.38–0.15		
		Print straight[4]	Q	–	J 0 0							0.70	–	–		
		Angled[4]				A						0.60	–	–		
0	5	Solder	L	M	J H 0	0	0.9	10.0	7.5	0.50	1.050	1.10	20	0.50		
					J G 0			7.5	5.6	0.80		0.85	22	0.38		
		Crimp[3]	N	P	J H 0			10.0	7.5	0.50		–	20–24	0.50–0.25		
					J G 0			7.5	5.6	0.80		–	22–26	0.38–0.15		
		Print straight[4]	Q	–	J 0 0							0.70	–	–		
		Angled[4]				A						0.60	–	–		
0	6	Solder	L	M	F G 0	0	0.7	7.5	5.6	0.65	1.100	0.85	22	0.38		
					F D 0			6.0	4.5	0.85		0.65	26	0.15		
		Crimp[3]	N	P	F G 0			7.5	5.6	0.65		–	22–26	0.38–0.15		
		Print straight[4]	Q	–	F 0 0			6.0	4.5	0.85		0.50	–	–		
		Angled[4]				A						0.60	–	–		
0	7	Solder	L	M	F G 0	0	0.7	7.5	4.9	0.65	1.100	0.85	22	0.38		
					F D 0			6.0	3.9	0.85		0.65	26	0.15		
		Crimp[3]	N	P	F G 0			7.5	4.9	0.65		–	22–26	0.38–0.15		
		Print straight[4]	Q	–	F 0 0			6.0	3.9	0.85		0.50	–	–		
		Angled[4]				A						0.60	–	–		
0	8	Solder	L	M	F G 0	0	0.7	7.5	4.9	0.40	1.000	0.85	22	0.38		
					F D 0			6.0	3.9	0.60		0.65	26	0.15		
		Crimp[3]	N	P	F G 0			7.5	4.9	0.40		–	22–26	0.38–0.15		
		Print straight[4]	Q	–	F 0 0			6.0	3.9	0.60		0.50	–	–		
		Angled[4]				A						0.60	–	–		
0	9	Solder	L	M	C D 0	0	0.5	6.0	3.9	0.45	0.900	0.65	26	0.15		
					C C 0			4.0	2.6	0.65		0.45	28	0.08		
		Print straight[4]	Q	–	C 0 0							0.50	–	–		
		Angled[4]				A						0.50	–	–		
1	0	Solder	L	M	C D 0	0	0.5	6.0	3.3	0.30	0.600	0.65	26	0.15		
					C C 0			4.0	2.2	0.50		0.45	28	0.08		
		Print straight[4]	Q	–	C 0 0							0.50	–	–		
		Angled[4]				A						0.50	–	–		
1	2[5]	Solder	L	M	C D 9	0	0.5	6.0	3.3	0.40	0.650	0.65	26	0.15		
					C C 9			4.0	2.2	0.50		0.45	28	0.08		
		Print straight[4]	Q	–	C 0 9							0.50	–	–		
		Angled[4]				A						0.50	–	–		
1	4	Solder	L	M	C D 0	0	0.5	6.0	3.0	0.30	0.700	0.65	26	0.15		
					C C 0			4.0	2.0	0.50		0.45	28	0.08		
		Print straight[4]	Q	–	C 0 0							0.50	–	–		
		Angled[4]				A						0.50	–	–		

The socket is installed in the (in-line) receptacle; the pin is installed in the plug. Reversed gender variants on request. Values in the table refer to the connector only. Cable specification see page 19.

[1] Derating factor, see page 116.
[2] Acc. to EIA-364-20F:2019-02, further information on voltage rating on page 110
[3] Tools for crimping and adjustment dimensions for crimping tool, see page 104
[4] PCB layouts see page 52; print termination only available for receptacle styles 5 and 8

1	2	3	4	5	6	7	8	9	10	11	12	13	14	15	16	17	18	19
		1	M			–	P							–			0	

CABLE TYPE

Number of contacts	Contact type			Single wires [1]			Cable PVC Black unshielded				Cable PVC White unshielded			
	Termination	Socket	Pin	Count number	Wire diameter mm	AWG	Count number	Outer cable diameter mm	Wire diameter mm	AWG	Count number	Outer cable diameter mm	Wire diameter mm	AWG
02	Solder	L	–	ZP	2.15 ± 0.10	18	ZP	5.30 ± 0.20	1.80 ± 0.20	18	○			
		–	M	–	–	–	ZO	5.30 ± 0.20	1.80 ± 0.20	18				
	Solder	L	–	ZN	1.50 ± 0.05	20	ZN	4.70 ± 0.20	1.50 ± 0.20	20	XN	4.4	1.40 ± 0.08	20
		–	M	–	–	–	ZM	4.70 ± 0.20	1.50 ± 0.20	20	XM	4.4	1.40 ± 0.08	20
03	Solder	L	–	YZ	2.15 ± 0.10	18	YZ	5.60 ± 0.20	1.80 ± 0.20	18	○			
		–	M	–	–	–	YY	5.60 ± 0.20	1.80 ± 0.20	18				
	Solder	L	–	YX	1.50 ± 0.05	20	YX	4.90 ± 0.20	1.50 ± 0.20	20	WX	4.6	1.40 ± 0.08	20
		–	M	–	–	–	YW	4.90 ± 0.20	1.50 ± 0.20	20	WW	4.6	1.40 ± 0.08	20
04	Solder	L	–	Z3	1.50 ± 0.05	20	Z3	5.40 ± 0.20	1.50 ± 0.20	20	○			
		–	M	–	–	–	Z2	5.40 ± 0.20	1.50 ± 0.20	20				
	Solder	L	–	Z1	1.30 ± 0.05	22	Z1	4.80 ± 0.20	1.30 ± 0.20	22	X1	4.5	1.25 ± 0.08	22
		–	M	–	–	–	Z0	4.80 ± 0.20	1.30 ± 0.20	22	X0	4.5	1.25 ± 0.08	22
05	Solder	L	–	Z3	1.50 ± 0.05	20	Z3	5.80 ± 0.20	1.50 ± 0.20	20	○			
		–	M	–	–	–	Z2	5.80 ± 0.20	1.50 ± 0.20	20				
	Solder	L	–	Z1	1.30 ± 0.05	22	Z1	5.30 ± 0.20	1.30 ± 0.20	22	X1	4.9	1.25 ± 0.08	22
		–	M	–	–	–	Z0	5.30 ± 0.20	1.30 ± 0.20	22	X0	4.9	1.25 ± 0.08	22
06	Solder	L	–	ZL	1.30 ± 0.05	22	ZL	5.70 ± 0.20	1.30 ± 0.20	22	○			
		–	M	–	–	–	ZK	5.70 ± 0.20	1.30 ± 0.20	22				
	Solder	L	–	ZH	1.00 ± 0.05	26	ZH	4.70 ± 0.20	1.00 ± 0.20	26	XH	4.6	1.00 ± 0.08	26
		–	M	–	–	–	ZG	4.70 ± 0.20	1.00 ± 0.20	26	XG	4.6	1.00 ± 0.08	26
07	Solder	L	–	ZL	1.30 ± 0.05	22	○				○			
		–	M	–	–	–								
	Solder	L	–	ZH	1.00 ± 0.05	26	ZH	4.80 ± 0.20	1.00 ± 0.20	26	XH	4.6	1.00 ± 0.08	26
		–	M	–	–	–	ZG	4.80 ± 0.20	1.00 ± 0.20	26	XG	4.6	1.00 ± 0.08	26
08	Solder	L	–	ZL	1.30 ± 0.05	22	ZL	6.20 ± 0.20	1.30 ± 0.20	22	○			
		–	M	–	–	–	ZK	6.20 ± 0.20	1.30 ± 0.20	22				
	Solder	L	–	ZH	1.00 ± 0.05	26	ZH	5.10 ± 0.20	1.00 ± 0.20	26	XH	5.1	1.00 ± 0.08	26
		–	M	–	–	–	ZG	5.10 ± 0.20	1.00 ± 0.20	26	XG	5.1	1.00 ± 0.08	26
09	Solder	L	–	ZV	1.00 ± 0.05	26	○				○			
		–	M	–	–	–								
	Solder	L	–	ZT	0.90 ± 0.05	28	ZT	5.40 ± 0.20	0.90 ± 0.20	28	XT	5.0	0.85 ± 0.08	28
		–	M	–	–	–	ZS	5.40 ± 0.20	0.90 ± 0.20	28	XS	5.0	0.85 ± 0.08	28
10	Solder	L	–	ZV	1.00 ± 0.05	26	ZV	5.70± 0.20	1.00 ± 0.20	26	○			
		–	M	–	–	–	ZU	5.70 ± 0.20	1.00 ± 0.20	26				
	Solder	L	–	ZT	0.90 ± 0.05	28	ZT	5.30 ± 0.20	0.90 ± 0.20	28	XT	5.0	0.85 ± 0.08	28
		–	M	–	–	–	ZS	5.30 ± 0.20	0.90 ± 0.20	28	XS	5.0	0.85 ± 0.08	28
12	Solder	L	–	ZZ	1.00 ± 0.05	26	ZZ	5.90 ± 0.20	1.00 ± 0.20	26	○			
		–	M	–	–	–	ZY	5.90 ± 0.20	1.00 ± 0.20	26				
	Solder	L	–	ZX	0.90 ± 0.05	28	ZX	5.60 ± 0.20	0.90 ± 0.20	28	XX	5.0	0.85 ± 0.08	28
		–	M	–	–	–	ZW	5.60 ± 0.20	0.90 ± 0.20	28	XW	5.0	0.85 ± 0.08	28
14	Solder	L	–	ZV	1.00 ± 0.05	26	ZV	6.20 ± 0.20	1.00 ± 0.20	26	○			
		–	M	–	–	–	ZU	6.20 ± 0.20	1.00 ± 0.20	26				
	Solder	L	–	ZT	0.90 ± 0.05	28	ZT	5.80 ± 0.20	0.90 ± 0.20	28	XT	5.5	0.85 ± 0.08	28
		–	M	–	–	–	ZS	5.80 ± 0.20	0.90 ± 0.20	28	XS	5.5	0.85 ± 0.08	28

○ On request

[1] For assembly with receptacle styles without bend relief only

1	2	3	4	5	6	7	8	9	10	11	12	13	14	15	16	17	18	19
C			1	M														

SPECIAL-CONTACT INSERT

For push-pull plugs and receptacles
For break-away plug A5, see page 50

All working voltages, unless otherwise stated: < 50 V AC / < 75 V DC
Please refer to Technical Information for further information and also for cases where a higher voltage is needed.

50 Ω coax

Coax		Contact type: Termination	Contact type: Socket	Contact type: Pin	Part number key insert			Contact diameter mm	Impedance Ω	Frequency range VSWR R < 1.25 GHz	Recommended cable	Nominal current A	Test voltage [1] EIA kV RMS	Termination cross-section AWG	Termination cross-section mm²	View on termination area: Pin piece	View on termination area: Socket piece
K	1	Crimp	N	P	C	D	0	0.5	50	0 – 3	RG 174 RG 316	2	1.000	26	0.15		

1	2	3	4	5	6	7	8	9	10	11	12	13	14	15	16	17	18	19
		1	M			–	P	K	1		C	D	0	–				

The socket is installed in the (in-line) receptacle; the pin is installed in the plug. Reversed gender variants on request. Values in the table refer to the connector only.
Cable specification see page 19.

[1] Acc. to EIA-364-20F:2019-02, further information on voltage rating on page 110

3 positions main voltage – only for plastic version

Number of contacts		Contact type: Termination	Contact type: Socket	Contact type: Pin	Part number key insert			Contact diameter mm	Single contact nominal current A	Nominal current insert A	Clearance and creepage distance contact to contact: mated mm	Clearance and creepage distance contact to contact: unmated mm	Contact-to-contact voltage: Working voltage [1,2,3] IEC V RMS	Contact-to-contact voltage: mated: Test voltage [2] IEC kV RMS	Contact-to-contact voltage: unmated: Test voltage [2] IEC kV RMS	Termination diameter mm	Termination cross-section AWG	Termination cross-section mm²	View on termination area: Pin piece	View on termination area: Socket piece
0	3	Solder	L	M	J	N	0	1 × 0.9 (first mate last break) 2 × 0.9	10	9	4.7	2	230	3.500	2.100	1.4	18	1		

1	2	3	4	5	6	7	8	9	10	11	12	13	14	15	16	17	18	19
		1	M			–	P	0	3		J	N	0	–				

The pin is installed in the (in-line) receptacle; the socket is installed in the plug. Values in the table refer to the connector only.

[1] In the case of the pin piece, voltage may only be applied in mated condition.
[2] IEC 60664-1:2020 (VDE 0110-1:2022-07): Overvoltage category III (in three phase 230 V / 400V AC supply systems. Rated impulse voltage 4.000 kV) (p. 111)
[3] IEC 60664-1:2020 (VDE 0110-1:2022-07): Pollution degree 3 (p. 111)

Media feed through

Media feed through	Feed through	Contact type: Socket	Contact type: Pin	Part number key insert			Contact inner diameter mm	Working pressure max. bar	Termination diameter mm	Tube diameter max. mm	View on termination area: Pin piece	View on termination area: Socket piece
F	Non Shut Off	B	S	1	1	0	2.5	2	4	6		

Shut off version on request

1	2	3	4	5	6	7	8	9	10	11	12	13	14	15	16	17	18	19
		1	M			–	0	F	1		1	1	0	–				

The socket is installed in the (in-line) receptacle; the pin is installed in the plug.

CABLE TYPE

50 Ω coax

Number of contacts		Contact type			Coax cable PVC RG 174		
		Termination	Socket	Pin	Count number	Outer cable diameter mm	Inner cable diameter mm
K	1	Crimp	L	–	VN	2.80 ± 0.15	1.52 ± 0.10
			–	M	VM	2.80 ± 0.15	1.52 ± 0.10

1	2	3	4	5	6	7	8	9	10	11	12	13	14	15	16	17	18	19
C			1	M			K	1										

3 positions main voltage – only for plastic version

Number of contacts		Contact type			Single wires			Cable PVC Black unshielded				Cable PVC White unshielded			
		Termination	Socket	Pin	Count number	Wire diameter mm	AWG	Count number	Outer cable diameter mm	Wire diameter mm	AWG	Count number	Outer cable diameter mm	Wire diameter mm	AWG
0	3	Solder	L	–	○			○				○			
			–	M											

○ On request

Media feed through – Air and fluid hoses assembly on request

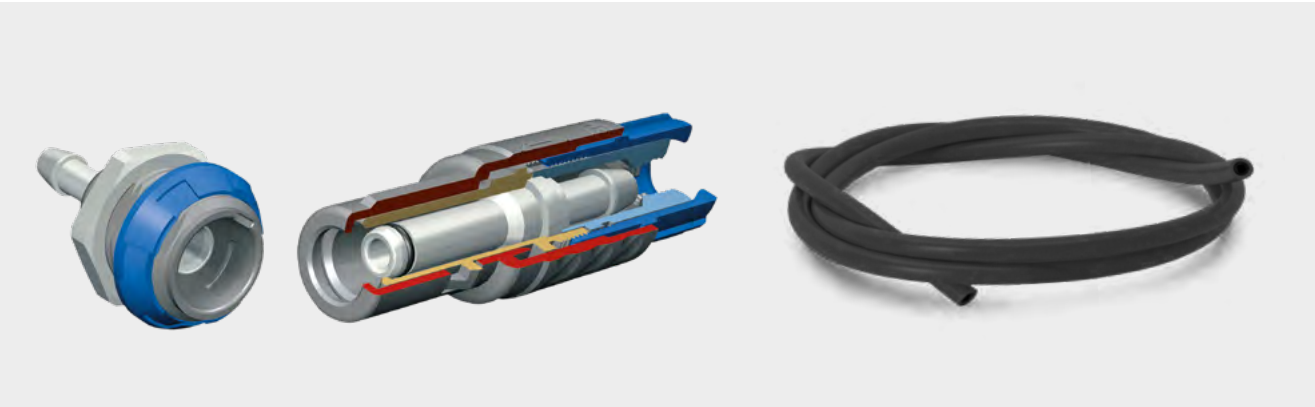

CONTACT INSERT STYLE A5

All working voltages, unless otherwise stated: < 50 V AC / < 75 V DC
Please refer to Technical Information for further information
and also for cases where a higher voltage is needed.

Number of contacts		Contact type: Termination	Contact type: Pin	Part number key insert			Contact diameter mm	Single contact nominal current[1] A	Nominal current insert A	Clearance and creepage distance contact to contact mm	Test voltage[2] EIA kV RMS	Termination diameter mm	Termination cross-section AWG	Termination cross-section mm²	View on termination area Pin piece
0	2	Solder	B	P	H	0	1.3	12.0	12.0	1.30	1.400	1.10	20	0.50	
0	3	Solder		P	H	9	1.3	12.0	12.0	1.20	1.600	1.10	20	0.50	
0	4	Solder		J	G	0	0.9	7.5	7.5	1.20	1.300	0.85	22	0.38	
0	5	Solder		J	G	0	0.9	7.5	5.6	0.80	1.050	0.85	22	0.38	
0	6	Solder		F	D	0	0.7	6.0	4.5	0.85	1.100	0.65	26	0.15	
0	7	Solder		F	D	0	0.7	6.0	3.9	0.85	1.100	0.65	26	0.15	
0	8	Solder		F	D	0	0.7	6.0	3.9	0.60	1.000	0.65	26	0.15	
0	9	Solder		C	C	0	0.5	4.0	2.6	0.65	0.900	0.45	28	0.08	
1	0	Solder		C	C	0	0.5	4.0	2.2	0.50	0.600	0.45	28	0.08	
1	2	Solder		C	C	9	0.5	4.0	2.2	0.50	0.650	0.45	28	0.08	
1	4	Solder		C	C	0	0.5	4.0	2.0	0.50	0.700	0.45	28	0.08	

Values in the table refer to the connector only.
Cable specification see page 19.

[1] Derating factor, see page 116.
[2] Acc. to EIA-364-20F:2019-02, further information on voltage rating on page 110

1	2	3	4	5	6	7	8	9	10	11	12	13	14	15	16	17	18	19
A	5	1	M			–	0			B				–	0	0	0	0

CABLE TYPE

Number of contacts		Contact type		Cable PVC Black unshielded				Cable PVC White unshielded			
		Termination	Pin	Count number	Outer cable diameter mm	Wire diameter mm	AWG	Count number	Outer cable diameter mm	Wire diameter mm	AWG
0	2	Solder	B	ZE	4.70 ± 0.20	1.50 ± 0.20	20	XE	4.40 ± 0.20	1.40 ± 0.08	20
0	3	Solder	B	ZC	4.90 ± 0.20	1.50 ± 0.20	20	XC	4.60 ± 0.20	1.40 ± 0.08	20
0	4	Solder	B	ZA	4.80 ± 0.20	1.30 ± 0.20	22	XA	4.50 ± 0.20	1.20 ± 0.08	22
0	5	Solder	B	ZA	5.30 ± 0.20	1.30 ± 0.20	22	XA	4.90 ± 0.20	1.20 ± 0.08	22
0	6	Solder	B	Z8	4.70 ± 0.20	1.00 ± 0.20	26	X8	4.60 ± 0.20	1.00 ± 0.08	26
0	7	Solder	B	Z8	4.80 ± 0.20	1.00 ± 0.20	26	X8	4.60 ± 0.20	1.00 ± 0.08	26
0	8	Solder	B	Z8	5.10 ± 0.20	1.00 ± 0.20	26	X8	5.10 ± 0.20	1.00 ± 0.08	26
0	9	Solder	B	Z6	5.40 ± 0.20	0.90 ± 0.20	28	X6	5.00 ± 0.20	0.85 ± 0.08	28
1	0	Solder	B	Z6	5.30 ± 0.20	0.90 ± 0.20	28	X6	5.00 ± 0.20	0.85 ± 0.08	28
1	2	Solder	B	Z4	5.60 ± 0.20	0.90 ± 0.20	28	X4	5.00 ± 0.20	0.85 ± 0.08	28
1	4	Solder	B	Z6	5.80 ± 0.20	0.90 ± 0.20	28	X6	5.50 ± 0.20	0.85 ± 0.08	28

1	2	3	4	5	6	7	8	9	10	11	12	13	14	15	16	17	18	19
C	A	5	1	M														

PCB LAYOUT

For PCB contacts (Size 1)

	Straight 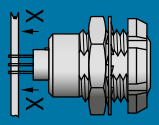	90° right-angled 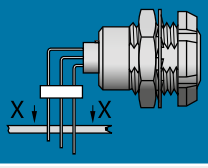
2 contacts	Contact borehole: Ø 0.8 mm 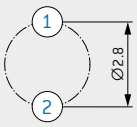	Contact borehole: Ø 0.9 mm 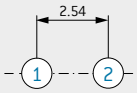
3 contacts	Contact borehole: Ø 0.8 mm 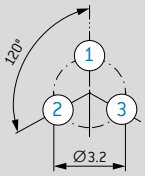	Contact borehole: Ø 0.9 mm 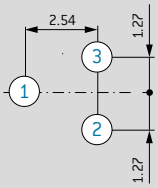
4 contacts	Contact borehole: Ø 0.8 mm 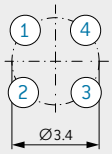	Contact borehole: Ø 0.7 mm 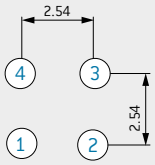
5 contacts	Contact borehole: Ø 0.8 mm 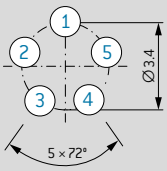	Contact borehole: Ø 0.7 mm 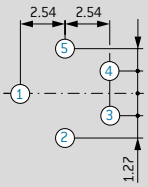
6 contacts	Contact borehole: Ø 0.6 mm 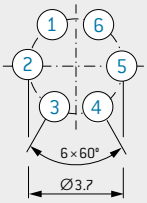	Contact borehole: Ø 0.7 mm 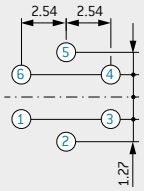
7 contacts	Contact borehole: Ø 0.6 mm 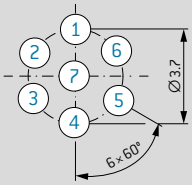	Contact borehole: Ø 0.7 mm 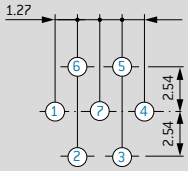

	Straight 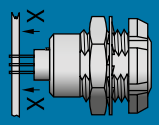	90° right-angled 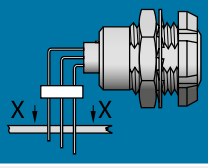
8 contacts	Contact borehole: Ø 0.6 mm 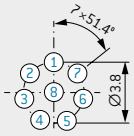	Contact borehole: Ø 0.7 mm 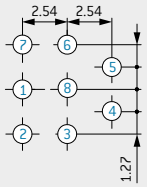
9 contacts	Contact borehole: Ø 0.6 mm 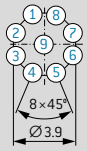	Contact borehole: Ø 0.7 mm 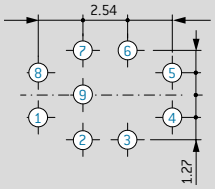
10 contacts	Contact borehole: Ø 0.6 mm 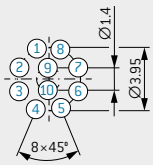	Contact borehole: Ø 0.7 mm 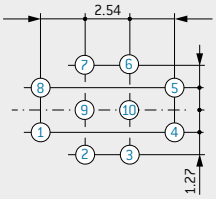
12 contacts	Contact borehole: Ø 0.6 mm 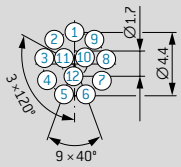	Contact borehole: Ø 0.7 mm 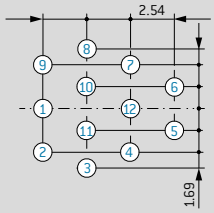
14 contacts	Contact borehole: Ø 0.6 mm 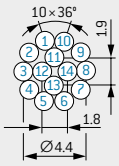	Contact borehole: Ø 0.7 mm 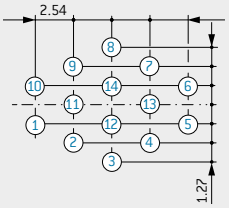

All specifications are only valid for socket inserts, pin inserts on request. Further PCB layouts upon request

RIGHT-ANGLED PCB CONTACT IN THE RECEPTACLE

A

RIGHT-ANGLED PCB CONTACT

IP50

For plastic style G5 / G8
For metal style G5 / GK

Contact diameter mm	Termination diameter mm
0.5	0.5
0.7	0.6
0.9	0.6
1.3	0.8

1	2	3	4	5	6	7	8	9	10	11	12	13	14	15	16	17	18	19
		1	M			–	P							–	A	0		

CABLE COLLET SYSTEM

For strain relief of push-pull plugs, inline receptacles and receptacles style 6

		Cable diameter mm	Material
3	9	> 2.7–3.9	PSU / PEI
5	2	> 4.0 – 5.2	
6	5	> 5.3–6.5	

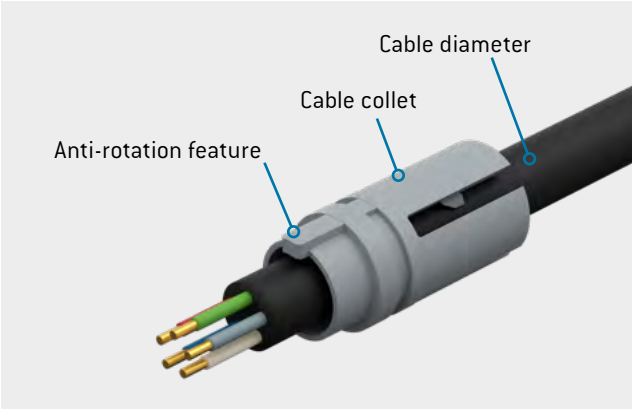

1	2	3	4	5	6	7	8	9	10	11	12	13	14	15	16	17	18	19
		1	M			–	P							–				

CABLE BEND RELIEF

For push-pull plug style 2 / 4 and in-line receptacle style 2 / 6

SILICONE CABLE BEND RELIEF

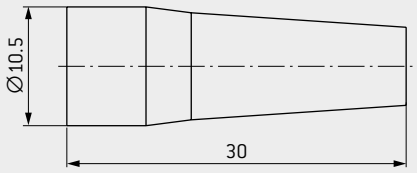

Part number	Cable diameter min.	Cable diameter max.
701.023.___.965.025	2.5	3.0
701.023.___.965.030	3.0	3.5
701.023.___.965.035	3.5	4.0
701.023.___.965.040	4.0	5.0
701.023.___.965.050	5.0	6.0
701.023.___.965.060	6.0	6.5

Color code	Color (Similar classic RAL)
202	Red (3020)
203	White (9010)
204	Yellow (1016)
205	Green (6032)
206	Blue (5002)
207	Gray (7005)
208	Black (9005)

COLOR CODE FOR CABLE ASSEMBLY (SIMILAR CLASSIC RAL)

	Plastic receptacle style 9, A, E Metal receptacle style 1, A
0	not applicable

	Silicone bend relief
2	Red (3020)
3	White (9010)
4	Yellow (1016)
5	Green (6032)
6	Blue (5002)
7	Gray (7005)
8	Black (9005)

	TPU overmolding
7	Gray (7045)
8	Black (9005)

	Push-pull plug back nut style 1 In-line receptacle style 1 / 5 Plastic receptacle front nut style 1 / 4 / 5 / 6 / 8 Metal receptacle front nut style 5, K
2	Red (3002)
3	White (9003)
4	Yellow (1016)
5	Green (6032)
6	Blue (5019)
7	Gray (7045)
8	Black (9004)

1	2	3	4	5	6	7	8	9	10	11	12	13	14	15	16	17	18	19
C			1	M														

RIGHT ANGLED CABLE OUTLET BACKSHELL FOR BREAK-AWAY PLUG

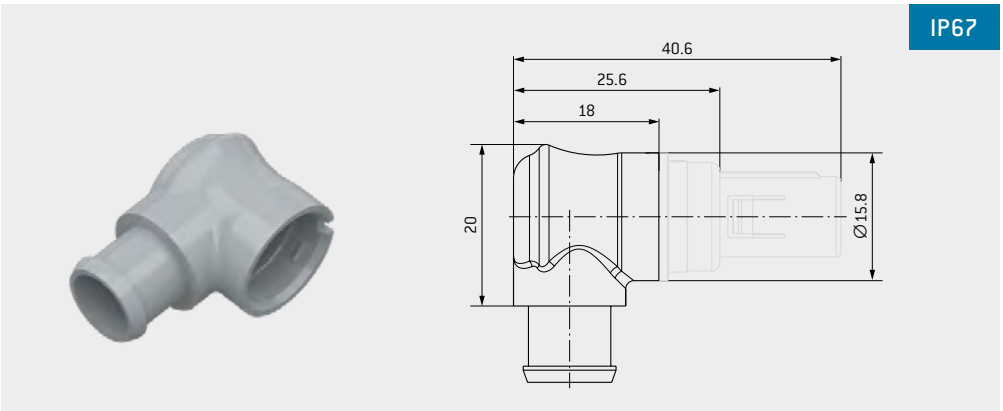

IP67 in assembled and potted condition / potting for strain relief necessary

Part number	Material	Cable diameter max.	Color (Similar classic RAL)
026.KM1.013.701.007	PSU	6.5	Gray (7045)
026.KM1.013.701.008	PSU		Black (9004)

CABLE BEND RELIEF FOR RIGHT ANGLED CABLE OUTLET BACKSHELL

Part number	Dim. L	Cable diameter	
	mm	min.	max.
702.023.___.965.025	36	2.5	3.0
702.023.___.965.030		3.0	3.5
702.023.___.965.035		3.5	4.0
702.023.___.965.040		4.0	5.0
702.023.___.965.050		5.0	6.0
702.023.___.965.060		6.0	6.5

SILICONE CABLE BEND RELIEF

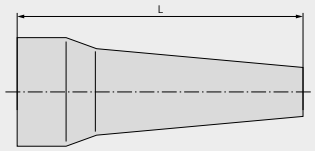

Color code	Color (Similar classic RAL)
202	Red (3020)
203	White (9010)
204	Yellow (1016)
205	Green (6032)
206	Blue (5002)
207	Gray (7005)
208	Black (9005)

STRAIGHT CABLE OUTLET BACKSHELL FOR BREAK-AWAY PLUG

STRAIGHT VERSION

IP30

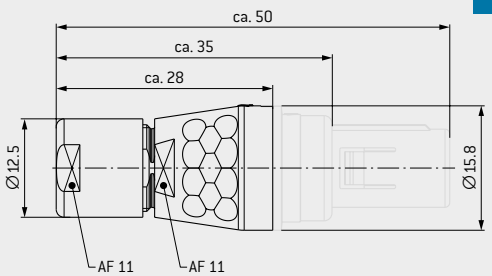

Straight version includes cable collet system for strain relief.

Part number	Material	Cable diameter mm
026.KM1.129.9__.025	PSU / PEI [1]	> 1.5 – 2.5
026.KM1.129.9__.037		> 2.5 – 3.7
026.KM1.129.9__.049		> 3.7 – 4.9
026.KM1.129.9__.060		> 4.9 – 6.0

Color code	Color (Similar classic RAL)
07	Gray (7045)
08	Black (9004)

[1] Housing and cable clamp PSU, back nut PEI

PROTECTIVE COVER

Applicable to receptacles and in-line receptacles with plastic housing

PROTECTIVE COVER

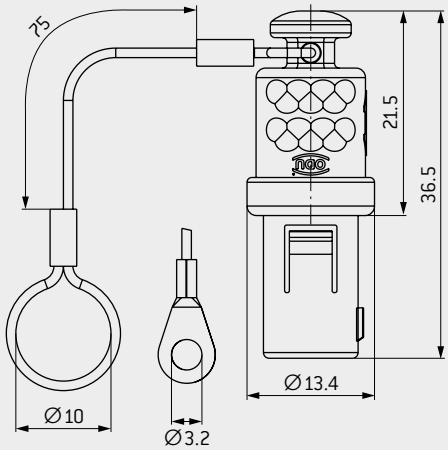

Part number	Material	Color (Similar classic RAL)	
		Cover	Polyamide lanyard
KM1.097.0_6.934._02	PSU	Red (3020)	White
KM1.097.0_6.934._03	PSU	White (9003)	
KM1.097.0_6.934._04	PSU	Yellow (1016)	
KM1.097.0_6.934._05	PSU	Green (6032)	
KM1.097.0_6.934._06	PSU	Blue (5019)	
KM1.097.0_6.934._07	PSU	Gray (7045)	
KM1.097.0_6.934._08	PSU	Black (9005)	Black
KM1.097.0_6.933._08	PEI		

	Coding
0	0°
A	40°
C	60°
E	80°
H	170°
J	205°

Lanyard material	
0	Polyamide lanyard with loop
1	Stainless steel lanyard with loop
2	Polyamide lanyard with solder lug
3	Stainless steel lanyard with solder lug

TRANSPORTATION CAP

Applicable to all straight plugs, right-angled plugs as well as break-away plugs

TRANSPORTATION CAP

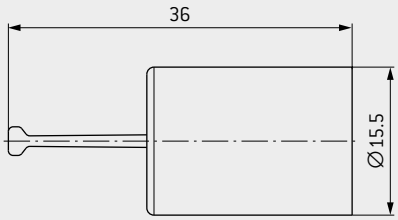

Part number	Material	Color (Similar classic RAL)
922.000.002.000.075	TPE	Yellow (1016)

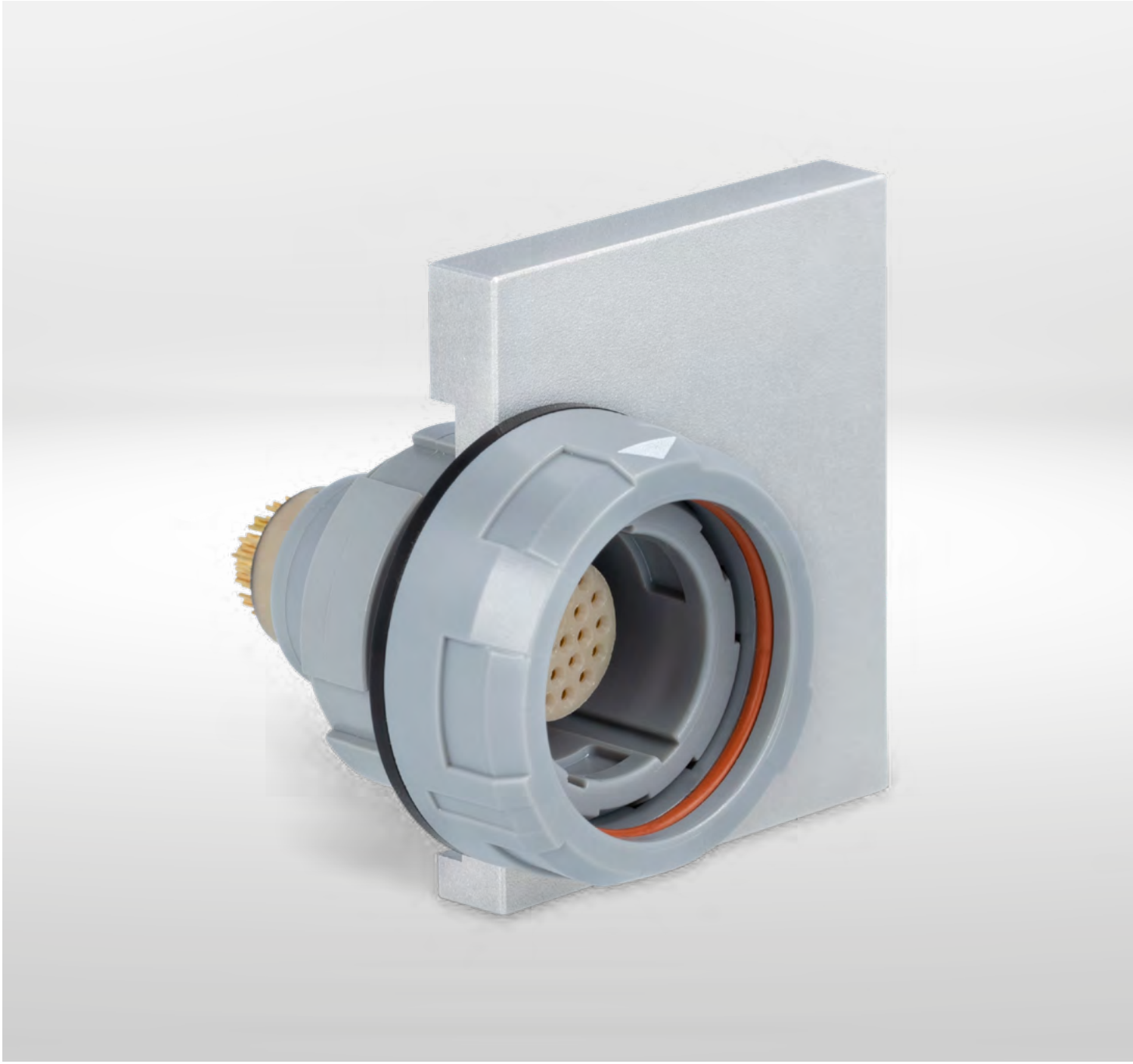

ODU MEDI-SNAP®

ODU MEDI-SNAP® WITH PLASTIC HOUSING SIZE 2

ODU MEDI-SNAP® PLASTIC HOUSING SIZE 2 – SUMMARY

The ODU MEDI-SNAP® with plastic housing in size 2 is coded by pin and groove. These circular connectors can have a variety of configurations: numerous styles of connectors and receptacles as well as various termination types, contact inserts and color codings.

- Coding over pin and groove
- 8 color codings
- 3 mechanical codings
- 3–26 contacts
- 2 termination types
- Contacts for solder and PCB termination
- A selection of numerous connectors and receptacles
- IP50 and IP64 available in mated condition
- Up to 5,000 mating cycles

STRAIGHT PLUG – PUSH-PULL

P. 62

2,000 mating cycles

IP50

PL

S 1

IP 64

PL

S 4

BREAK-AWAY PLUG

P. 64

2,000 mating cycles

PL

A 5

PL Plastic

For assembly instructions, please refer to our website: www.odu-connectors.com/downloads/assembly-instructions

RECEPTACLE	P. 66	5,000 mating cycles
IEC 60601-1: 2 MOOP[1] and 1 MOPP[1]		
IP50		
PL		G 1
IEC 60601-1: 2 MOOP[1] and 2 MOPP[1]		
IP64		
PL		G 4
IEC 60601-1: 2 MOOP[1] and 1 MOPP[1]		
IP64		
PL		G 5

[1] As per IEC 60601-1:2012 (VDE 0750-1:2013-12).
Max working voltage of the medical device 250 V AC (degree of pollution 2).
All cable assemblies in the catalog fulfill 1MOOP/1MOPP.
To ensure the required clearence and creepage distance in the termination area of plug style A5, a corresponding potting sleeve must be used (not included in the scope of delivery).

For further information on
IEC 60601-1
see page 118 ff.

STRAIGHT PLUG

Push-pull styles

S 1 0

STYLE: 1

IP50

With standard back nut

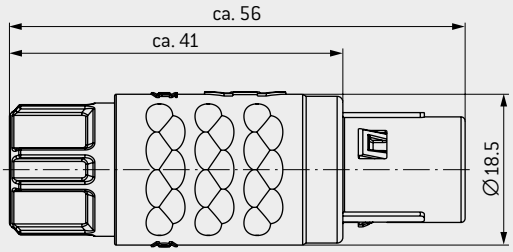

PL

4 S

STYLE: 4

IP64

With back nut[1] for cable bend relief[2]

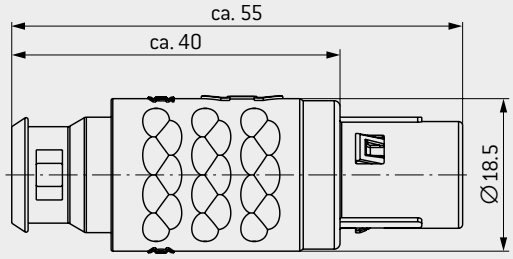

PL

TECHNICAL DATA

- Contact configuration see page 72 ff.
- Mechanical and color coding see page 70.
- Cable collet diameter see page 78.
- Housing material and color see page 71.
- Accessories see page 79 ff.
- IP rate in mated condition and depending on the mating receptacle

1	2	3	4	5	6	7	8	9	10	11	12	13	14	15	16	17	18	19
S		2	M		7	–	P							–				

[1] Back nuts for cable bend reliefs have to be ordered in the same color as the connector housing. The color coding is based on the cable bend relief. [2] Cable bend reliefs have to be ordered separately (see page 79).

For support and customer specific solutions: **sales@odu.de**

CABLE ASSEMBLY – STRAIGHT PLUG

S 1 1

STYLE: 1 With standard back nut

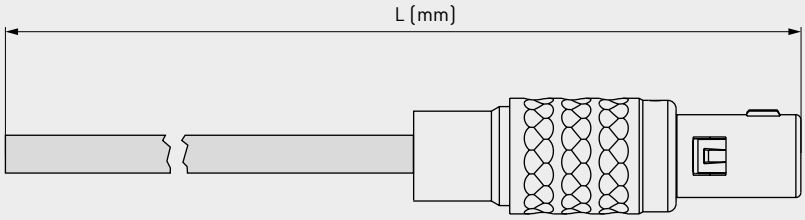

4 3

STYLE: 4 With silicone bend relief

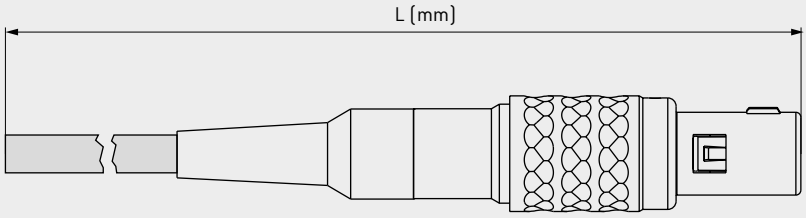

L (mm)

1	2	3	4	5	6	7	8	9	10	11	12	13	14	15	16	17	18	19
C	S		2	M														

For support and customer specific solutions: **sales@odu.de**

BREAK-AWAY PLUG

Break-away styles

A | 5

STYLE: 5 | **IP64**

Suitable for overmolding (without cable outlet)

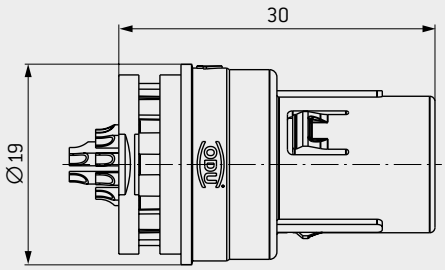

PL

TECHNICAL DATA

- Contact configuration see page 74 ff.
- Mechanical and color coding see page 70.
- Housing material and color see page 71.
- Accessories see page 79 ff.
- IP rate in mated condition and depending on the mating receptacle
- Housing and insulator moulded in one piece

1	2	3	4	5	6	7	8[1]	9	10	11	12	13	14	15	16	17	18	19
A	5	2	M	C	7	–	0							–	0	0	0	0

[1] In the case of this style, the connector housing as well as the insulator are made of the housing material PSU.

CABLE ASSEMBLY – BREAK-AWAY PLUG

A 5 4

STYLE: 5 With TPU overmolding

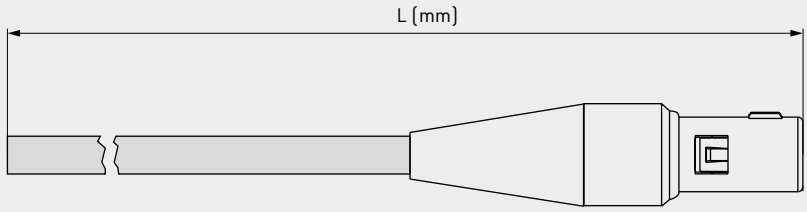

L (mm)

1	2	3	4	5	6	7	8	9	10	11	12	13	14	15	16	17	18	19
C	A	5	2	M	C				4									

RECEPTACLE

G 1

STYLE: 1

IP50

For front panel installation

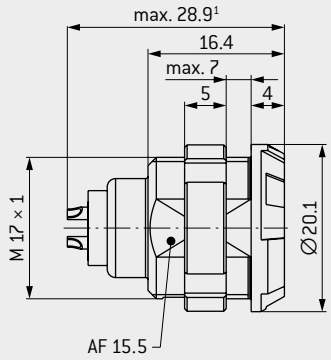

PL

PANEL CUT-OUT

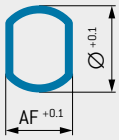

AF : 15.6 mm
Ø : 17.1 mm

5

STYLE: 5

IP50

For front or rear panel installation

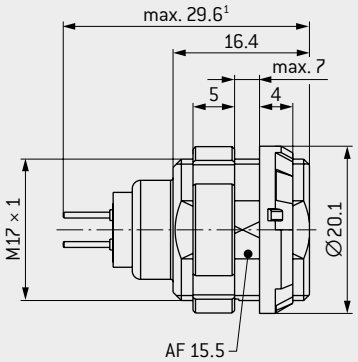

PL

PANEL CUT-OUT

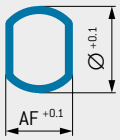

AF : 15.6 mm
Ø : 17.1 mm

TECHNICAL DATA

- Contact configuration see page 72 ff.
- Style G5 mechanical and color coding see page 70.
- Style G1 available in Black or Gray (further color on request)
- Housing material and color see page 71.
- IP50 in mated condition
- IP50 with respect to the end device in unmated condition

Style 1, default "0"

1	2	3	4	5	6	7	8	9	10	11	12	13	14	15	16	17	18	19
G		2	M		7	–	P							–		0		1

[1] Depending on the insert

CABLE ASSEMBLY – RECEPTACLE

G 1 0
5

STYLE:1 / 5 No bend relief

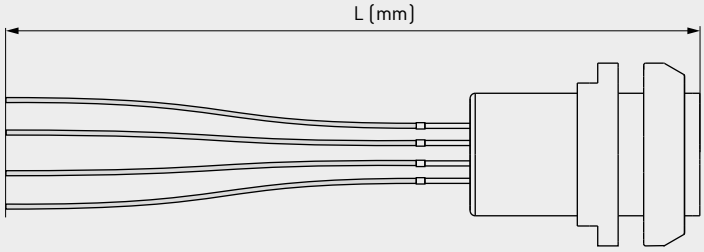

L (mm)

1	2	3	4	5	6	7	8	9	10	11	12	13	14	15	16	17	18	19
C	G		2	M					0									

RECEPTACLE

G | 4

STYLE: 4

For front panel installation

IP64

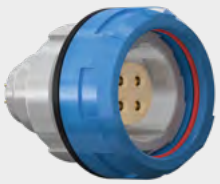

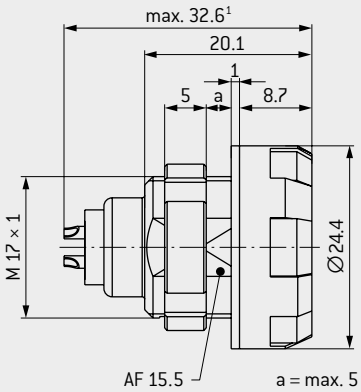

PL

PANEL CUT-OUT

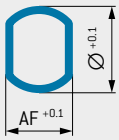

AF : 15.6 mm
Ø : 17.1 mm

TECHNICAL DATA

- Contact configuration see page 72 ff.
- Mechanical and color coding see page 70.
- Housing material and color see page 71.
- IP64 in mated condition with push-pull plug style S4
- IP50 with respect to the end device in unmated condition

1	2	3	4	5	6	7	8	9	10	11	12	13	14	15	16	17	18	19
G	4	2	M		7	–	P							–		0		1

[1] Depending on the insert

CABLE ASSEMBLY – RECEPTACLE

G 4 0

STYLE: 4 No bend relief

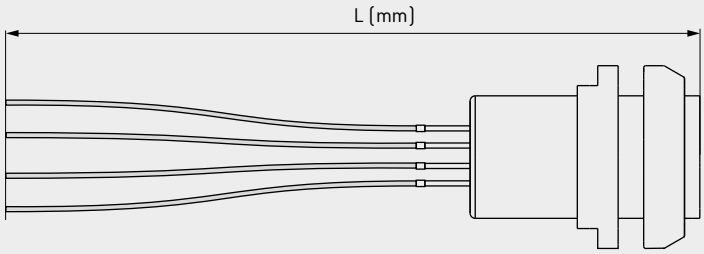

L (mm)

1	2	3	4	5	6	7	8	9	10	11	12	13	14	15	16	17	18	19
C	G	4	2	M					0									

MECHANICAL CODING

	Angle	Receptacle front view	Plastic		
			Push-pull plug	Break-away plug	Receptacle
C	60°		●	●	●
E	80°		●	○	●
F	90°		●	○	●

● Standard
○ On request

1	2	3	4	5	6	7	8	9	10	11	12	13	14	15	16	17	18	19
		2	M			–								–				

HOUSING MATERIAL AND COLOR CODING

For autoclaving, choose PEI for push-pull plugs or PSU for break-away plugs.
All receptacles and color codings are autoclavable.

Color (similar classic RAL)	Material [1]	Housing material				Color coding		
		Push-pull plug	Break-away plug	Receptacle		Plug back nut	Receptacle front nut	
Gray (7045)	PSU	●	● autoclavable	●	7	●	●	7
Gray (7045)	PEI	● autoclavable	–	●	G	●	●	7
Black (9004)	PSU	●	● autoclavable	●	8	●	●	8
Black (9004)	PEI	● autoclavable	–	●	S	●	●	8
Red (3002)	PSU	○	○	○	2	●	●	2
White (9003)	PSU	○	○	○	3	●	●	3
Yellow (1016)	PSU	○	○	○	4	●	●	4
Green (6032)	PSU	○	○	○	5	●	●	5
Blue (5019)	PSU	○	○	○	6	●	●	6
Orange (2003)	PSU	○	○	○	9	○	○	9

● Standard
○ On request

For more detailed information on the topic of "autoclaving" see page 121

[1] For information about biocompatible materials, please contact sales@odu-de
[2] Back nuts for cable bend relief have to be ordered in the same color as the connector housing. Please order bend relief separately.

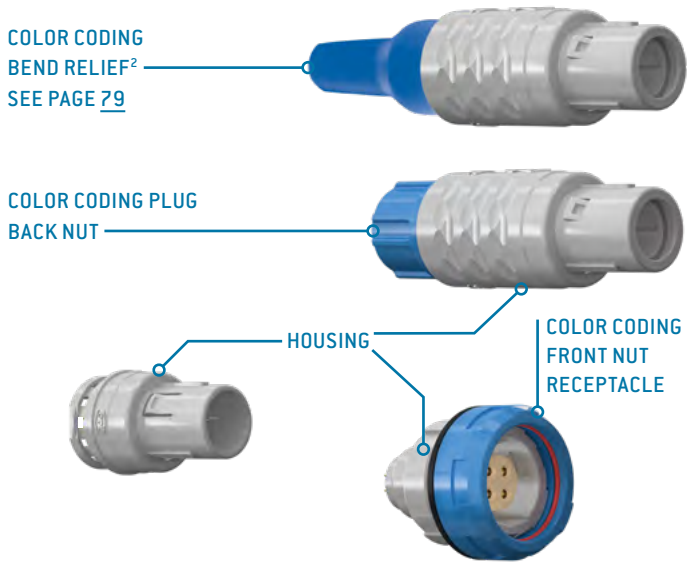

1	2	3	4	5	6	7	8	9	10	11	12	13	14	15	16	17	18	19
		2	M			–								–				

CONTACT INSERT

For push-pull plugs and receptacles
For break-away plug A5, see page 64

All working voltages, unless otherwise stated: < 50 V AC / < 75 V DC
Please refer to Technical Information for further information and also for cases where a higher voltage is needed.

Number of contacts		Contact type: Termination	Socket	Pin	Part number key insert			Contact style	Contact diameter mm	Single contact nominal current[1] A	Nominal current insert A	Clearance and creepage distance contact to contact mm	Test voltage[2] EIA kV RMS	Termination diameter mm	Termination cross-section AWG	mm²	View on termination area: Pin piece	Socket piece
0	4	Solder	L	M	P	N	0	0	1.3	15.00	15.00	1.6	2.050	1.40	18	1.00		
					P	H	0			12.00	12.00	2.0		1.10	20	0.50		
		Print straight[3]	Q	–	P	0	0							0.70	–	–		
		Angled[3]						A						0.80	–	–		
1	2	Solder	L	M	F	G	0	0	0.7	7.50	3.75	0.8	1.050	0.85	22	0.38		
					F	D	0			6.00	3.00	1.0		0.65	26	0.15		
		Print straight[3]	Q	–	F	0	0							0.70	–	–		
		Angled[3]						A						0.60	–	–		
1	6	Solder	L	M	F	G	0	0	0.7	7.50	3.75	0.5	1.100	0.85	22	0.38		
					F	D	0			6.00	3.00	0.7		0.65	26	0.15		
		Print straight[3]	Q	–	F	0	0							0.70	–	–		
		Angled[3]						A						0.60	–	–		
1	9	Solder	L	M	F	G	0	0	0.7	7.50	3.40	0.5	1.050	0.85	22	0.38		
					F	D	0			6.00	2.70	0.7		0.65	26	0.15		
		Print straight[3]	Q	–	F	0	0							0.70	–	–		
		Angled[3]						A						0.60	–	–		
2	6	Solder	L	M	C	C	0	0	0.5	4.00	1.60	0.5	1.050	0.45	28	0.08		
		Print straight[3]	Q	–	C	0	0							0.50	–	–		
		Angled[3]						A						0.50	–	–		

The socket is installed in the receptacle; the pin is installed in the plug.
Reversed gender variants on request.
Values in the table refer to the connector only.
Cable specification see page 19.

[1] Derating factor, see page 116.
[2] Acc. to EIA-364-20F:2019-02, further information on voltage rating on page 110
[3] PCB layouts, see page 76; print termination only available for receptacle style 5

1	2	3	4	5	6	7	8	9	10	11	12	13	14	15	16	17	18	19
		2	M			–	P							–				

SPECIAL-CONTACT INSERT

Special contact inserts for main and high voltage

Insulator material[7]	Number of contacts[5]		Contact type: Termination	Socket	Pin	Part number key insert			Contact diameter mm	Single contact nominal current[1] A	Nominal current insert A	Clearance and creepage distance contact to contact: mated mm	unmated mm	Contact-to-contact voltage: Working voltage[2,3,4] IEC V RMS	mated: Test voltage[3] IEC kV RMS	unmated: Test voltage[3] IEC kV RMS	Termination diameter mm	Termination cross-section AWG	mm²	View on termination area: Pin piece	Socket piece
P	0	3	Solder	L	M	T	S	0	1 × 2 (first mate last break) 2 × 2	22	22	4.7	2.0	230	3.500	2.100	2.4	14	2.5		
T	0	5	Solder	L[8]		P	Q	9	1 × 1.3 (first mate last break) 2 × 1.3 (lagging)	16	12	9.9	3.2	600[6]	3.500[6]	2.100	1.9	16	1.5		
					M[9]	P	Q	L	2 × 1.3			13.6	3.2	1,000[6]	3.500[6]	2.100					

Values in the table refer to the connector only. Cable specification see page 19.

[1] Derating factor, see page 116.
[2] In the case of the pin piece, voltage may only be applied in mated condition.
[3] IEC 60664-1:2020 (VDE 0110-1:2022-07): Overvoltage category III (in three phase 230 V / 400 V AC supply systems. Rated impulse voltage 4.000kV) (p. 111)
[4] IEC 60664-1:2020 (VDE 0110-1: 2022-07): Pollution degree 3 (p. 111)
[5] Normal and reversed gender is possible.
[6] Voltage may only be applied to fully assembled and potted connectors in mated condition.
[7] P: PEEK / T: PBT (not autoclavable)
[8] 4 x socket / 1 x pin
[9] 1 x socket / 4 x pin

1	2	3	4	5	6	7	8	9	10	11	12	13	14	15	16	17	18	19
		2	M			–								–				

CABLE TYPE

Number of contacts		Contact type			Single wires [1]			Cable PVC Black unshielded				Cable PVC White unshielded			
		Termination	Socket	Pin	Count number	Wire diameter mm	AWG	Count number	Outer cable diameter mm	Wire diameter mm	AWG	Count number	Outer cable diameter mm	Wire diameter mm	AWG
0	4	Solder	L	–	ZP	2.15 ± 0.10	18	–				○			
			–	M	n.a.			ZO	6.10 ± 0.20	1.80 ± 0.20	18				
		Solder	L	–	ZN	1.50 ± 0.05	20	–				○			
			–	M	n.a.			ZM	5.40 ± 0.20	1.50 ± 0.20	20				
1	2	Solder	L	–	ZL	1.30 ± 0.05	22	–				○			
			–	M	n.a.			ZK	7.20 ± 0.20	1.30 ± 0.20	22				
		Solder	L	–	ZH	1.00 ± 0.05	26	–				○			
			–	M	n.a.			ZI	5.90 ± 0.20	1.00 ± 0.20	26				
1	6	Solder	L	–	ZL	1.30 ± 0.05	22	○				○			
			–	M	n.a.										
		Solder	L	–	ZH	1.00 ± 0.05	26	–				○			
			–	M	n.a.			ZG	6.50 ± 0.20	1.00 ± 0.20	26				
1	9	Solder	L	–	ZL	1.30 ± 0.05	22	○				○			
			–	M	n.a.										
		Solder	L	–	ZH	1.00 ± 0.05	26	–				○			
			–	M	n.a.			ZG	7.10 ± 0.25	1.00 ± 0.20	26				
2	6	Solder	L	–	ZT	0.90 ± 0.05	28	–				○			
			–	M	n.a.			ZS	7.40 ± 0.25	0.90 ± 0.20	28	○			

○ On request

[1] For assembly with receptacle styles without bend relief only

1	2	3	4	5	6	7	8	9	10	11	12	13	14	15	16	17	18	19
C			2	M														

Number of contacts		Contact type			Single wires			Cable PVC Black unshielded				Cable PVC White unshielded			
		Termination	Socket	Pin	Count number	Wire diameter	AWG	Count number	Outer cable diameter in mm	Wire diameter	AWG	Count number	Outer cable diameter in mm	Wire diameter	AWG
0	3	Solder	L	–	○			○				○			
			–	M											
0	5	Solder	L	–	○			○				○			
			–	M											

○ On request

CONTACT INSERT STYLE A5

All working voltages, unless otherwise stated: < 50 V AC / < 75 V DC
Please refer to Technical Information for further information and also for cases where a higher voltage is needed.

Number of contacts		Contact type: Termination	Contact type: Pin	Part number key insert			Contact diameter mm	Single contact nominal current[1] A	Nominal current insert A	Clearance and creepage distance contact to contact mm	Test voltage[2] EIA kV RMS	Termination diameter mm	Termination cross-section AWG	Termination cross-section mm²	View on termination area Pin piece
1	6	Solder	M	F	G	0	0.7	7.5	3.8	0.5	1.100	0.85	22	0.38	
2	6			C	D	0	0.5	6.0	2.4	0.4	1.050	0.65	26	0.15	

[1] Derating factor, see page 116.
[2] Acc. to EIA-364-20F:2019-02, further information on voltage rating on page 110

1	2	3	4	5	6	7	8	9	10	11	12	13	14	15	16	17	18	19
A	5	2	M	C		–	0							–	0	0	0	0

SPECIAL-CONTACT INSERT STYLE A5

CAUTION: Style A5 (5-pos.) mateable with the following receptacles:
G12MC7-P05LMM9-0001
G42MC7-P05LMM9-0071
G52MC7-P05LMM9-0002
Other variants upon request.

Number of contacts		Contact type: Termination	Contact type: Pin	Part number key insert			Contact diameter mm	Single contact nominal current A	Nominal current insert A	Clearance and creepage distance contact to contact: mated mm	Clearance and creepage distance contact to contact: unmated mm	Contact-to-contact voltage: Working voltage[2,3,4] IEC V RMS	Contact-to-contact voltage: mated: Test voltage[3] IEC kV RMS	Contact-to-contact voltage: unmated: Test voltage[3] IEC kV RMS	Termination diameter mm	Termination cross-section AWG	Termination cross-section mm²	View on termination area Pin piece
0	5[5]	Solder	M	M	M	9	1 × 1.3 (first mate last break) 2 × 1.3	16.0	12.0	8.2	1.8	320[5]	1.250	1.250	1.85	16	1.5	
							2 × 0.9	10.0	7.5	8.2	1.8		1.250	1.250	1.10	20	0.5	

[1] Derating factor, see page 116.
[2] In the case of the pin piece, voltage may only be applied in mated condition.
[3] IEC 60664-1:2020 (VDE 0110-1:2022-07): Overvoltage category III (in three phase 230V/400V AC supply systems. Rated impulse voltage 4.000kV) (p. 111)
[4] IEC 60664-1:2020 (VDE 0110-1:2022-07): Pollution degree 3 (p. 111)
[5] Voltage may only be applied to fully assembled and potted connectors in mated condition.

1	2	3	4	5	6	7	8	9	10	11	12	13	14	15	16	17	18	19
A	5	2	M	C		–	0	0	5	M	M	M	9	–	0	0	0	0

CABLE TYPE

Number of contacts		Contact type		Cable PVC Black unshielded				Cable PVC White unshielded			
		Termination	Pin	Count number	Outer cable diameter mm	Wire diameter mm	AWG	Count number	Outer cable diameter mm	Wire diameter mm	AWG
1	6	Solder	M	○				○			
2	6	Solder	M	ZU	7.40 ± 0.25	0.90 ± 0.20	28	○			

○ On request

1	2	3	4	5	6	7	8	9	10	11	12	13	14	15	16	17	18	19
C	A	5	2	M	C													

Number of contacts		Contact type		Cable PVC Black unshielded				Cable PVC White unshielded			
		Termination	Pin	Count number	Outer cable diameter in mm	Wire diameter	AWG	Count number	Outer cable diameter in mm	Wire diameter	AWG
0	5	Solder	M	○				○			

○ On request

PCB LAYOUT

For PCB contacts (Size 2)

	Straight 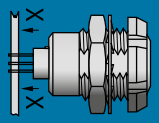	90° right-angled 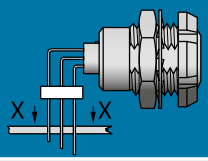
4 contacts	Contact borehole: ∅ 0.8 mm 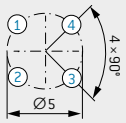	Contact borehole: ∅ 0.9 mm 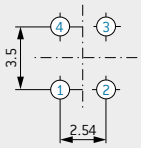
12 contacts	Contact borehole: ∅ 0.8 mm 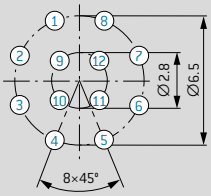	Contact borehole: ∅ 0.7 mm 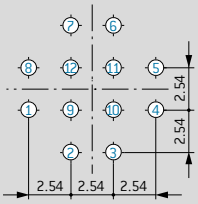
16 contacts	Contact borehole: ∅ 0.8 mm 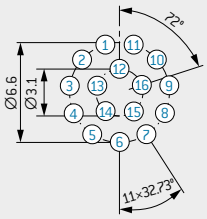	○
19 contacts	Contact borehole: ∅ 0.8 mm 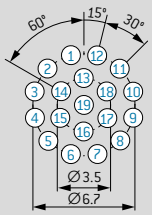	○
26 contacts	Contact borehole: ∅ 0.6 mm 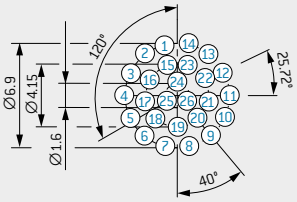	Contact borehole: ∅ 0.6 mm 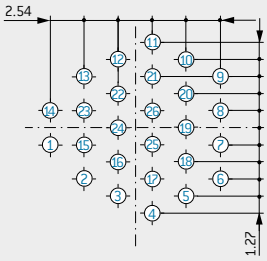

○ On request

RIGHT-ANGLED PCB CONTACT IN THE RECEPTACLE

A

RIGHT-ANGLED PCB CONTACT

IP50

For style G5

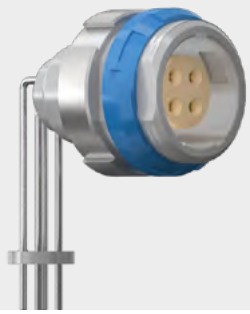

Contact diameter mm	Termination diameter mm
0.5	0.5
0.7	0.6
1.3	0.8

1	2	3	4	5	6	7	8	9	10	11	12	13	14	15	16	17	18	19
		2	M		7	–	P							–	A	0		1

CABLE COLLET SYSTEM

For strain relief of push-pull plugs

		Cable diameter mm	Material
5	4	> 3.2 – 5.4	PSU / PEI
7	4	> 5.4 – 7.4	
9	2	> 7.4 – 9.2	

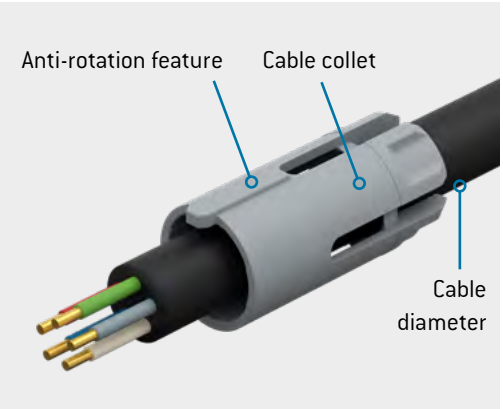

1	2	3	4	5	6	7	8	9	10	11	12	13	14	15	16	17	18	19
		2	M		7	–	P							–				

CABLE BEND RELIEF

For push-pull plug style 4

SILICONE CABLE BEND RELIEF

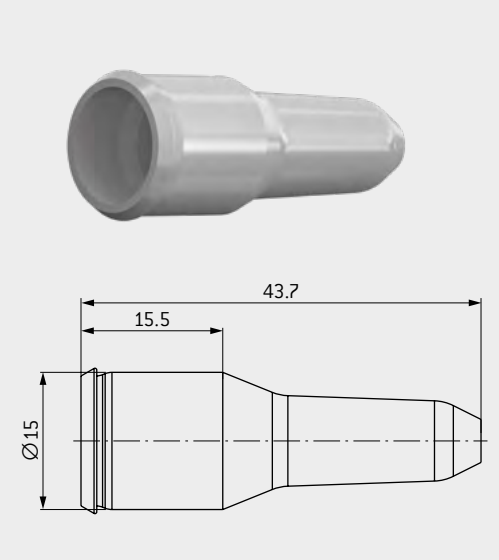

Part number	Cable diameter min.	Cable diameter max.
KM2.023.___.965.032	3.2	4.7
KM2.023.___.965.047	4.7	6.2
KM2.023.___.965.062	6.2	7.7
KM2.023.___.965.077	7.7	9.2

Color code	Color (Similar classic RAL)
207	Gray (7000)
208	Black (9005)

COLOR CODE FOR CABLE ASSEMBLY (SIMILAR CLASSIC RAL)

	Receptacle style 1
0	not applicable

	Silicone bend relief
7	Gray (7005)
8	Black (9005)

	TPU overmolding
7	Gray (7045)
8	Black (9005)

	Push-pull plug back nut style 1 Plastic receptacle front nut style 4, 5
2	Red (3002)
3	White (9003)
4	Yellow (1016)
5	Green (6032)
6	Blue (5019)
7	Gray (7045)
8	Black (9004)

1	2	3	4	5	6	7	8	9	10	11	12	13	14	15	16	17	18	19
C			2	M														

STRAIGHT CABLE OUTLET BACKSHELL FOR BREAK-AWAY PLUG

STRAIGHT VERSION

IP30

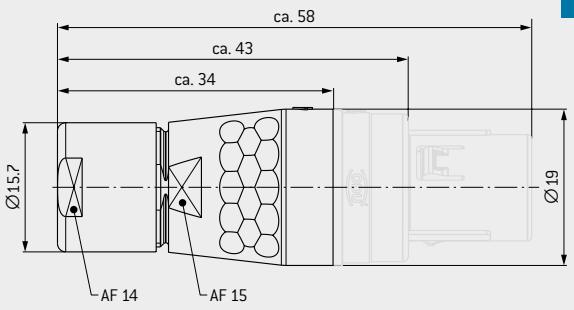

Straight version includes cable collet system for strain relief.

Part number	Material	Cable diameter mm
026.KM2.129.9__.045	PSU / PEI [1]	> 3.1 – 4.5
026.KM2.129.9__.060		> 4.5 – 6.0
026.KM2.129.9__.075		> 6.0 – 7.5
026.KM2.129.9__.090		> 7.5 – 9.0

Color code	Color (Similar classic RAL)
07	Gray (7045)
08	Black (9004)

[1] Housing and cable clamp PSU, back nut PEI

TRANSPORTATION CAP

Applicable to all straight plugs as well as break-away plugs

TRANSPORTATION CAP

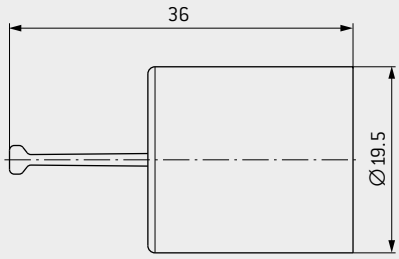

Part number	Material	Color (similar classic RAL)
922.000.002.000.079	TPE	Yellow (1016)

PLASTIC HOUSING
SIZE 2

Table of contents

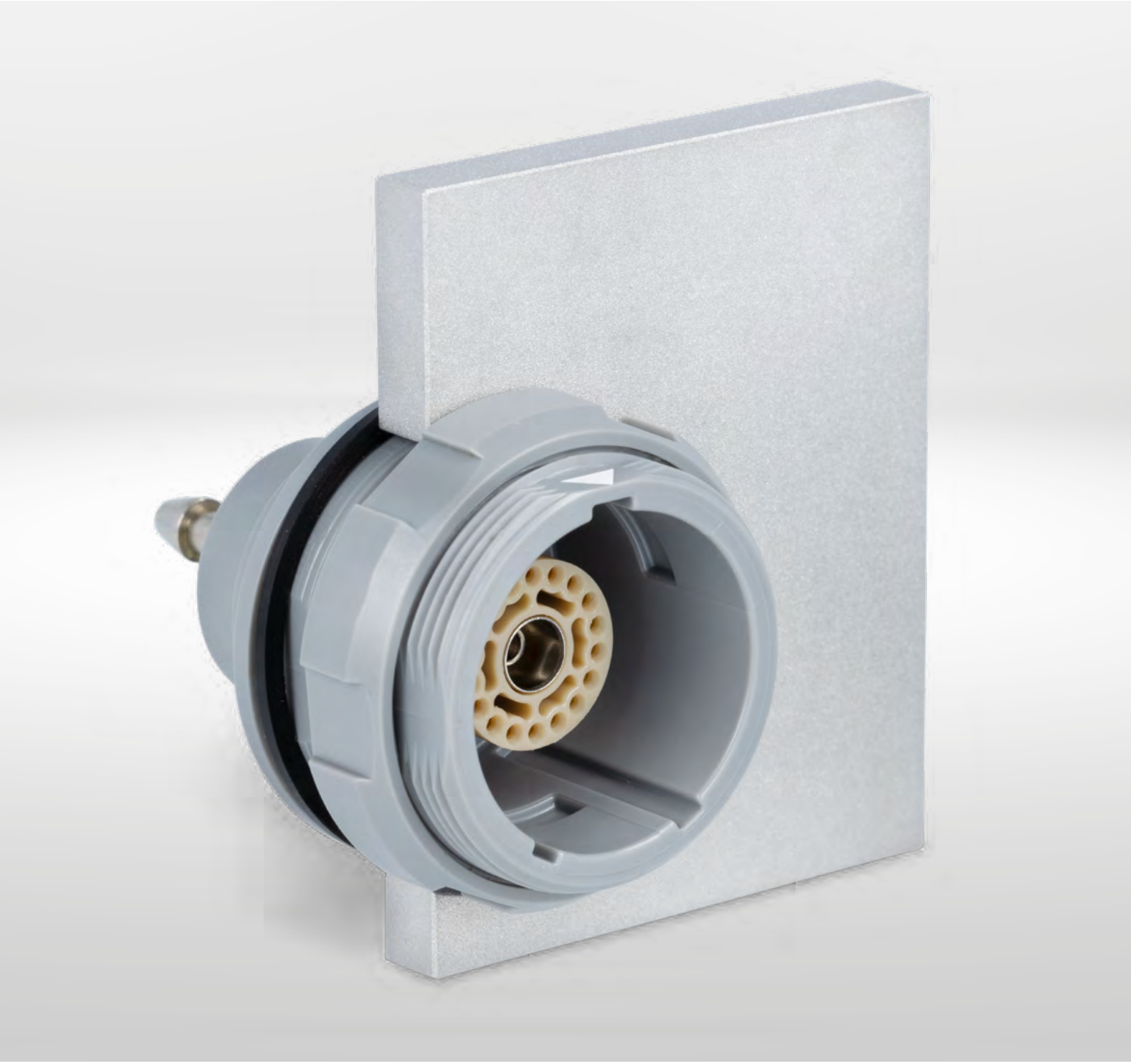

ODU MEDI-SNAP®

ODU MEDI-SNAP®
PLASTIC HOUSING SIZE 3.5

ODU MEDI-SNAP® PLASTIC HOUSING SIZE 3.5 – SUMMARY

The ODU MEDI-SNAP® with plastic housing in size 3.5 is coded by pin and groove. These circular connectors can have a variety of configurations: numerous styles of connectors and receptacles as well as various termination types, contact inserts and color codings.

- Coding over pin and groove
- 8 color codings
- 3 mechanical codings
- 19 / 41 contacts
- 2 termination types
- Contacts for solder PCB termination
- A selection of numerous connector and receptacle styles
- IP50 and IP68 available in mated condition
- Up to 5,000 mating cycles
- Hybrid inserts including signals and media feedthrough

STRAIGHT PLUG – PUSH-PULL	P. 86	5,000 mating cycles
IP50		
PL		S 1
IP68		
PL		S 3
IP50		
PL		S 2
IP68		
PL		S 4

PL Plastic

For assembly instructions, please refer to our website: www.odu-connectors.com/downloads/assembly-instructions

RECEPTACLE	P. 87	5,000 mating cycles
IEC 60601-1: 2 MOOP[1] and 2 MOPP[1]		

IP50 PL		G 1
IP50 PL		G 8
IP68 PL		G E
IP68 PL	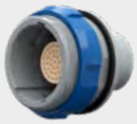	G C
IP68 PL		G A [2]
IP68 PL	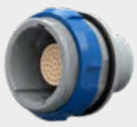	G D [2]

[1] As per IEC 60601-1:2012 (VDE 0750-1:2013-12).
Max. working voltage of the medical device 250 V AC (degree of pollution 2).
[2] IP68 in unmated condition with respect to the device

For further information on **IEC 60601-1** see page 118 ff.

STRAIGHT PLUG

Push-pull styles

S 1 0 / 3

STYLE:1 / 3

S1: IP50 / S3: IP68

With standard back nut

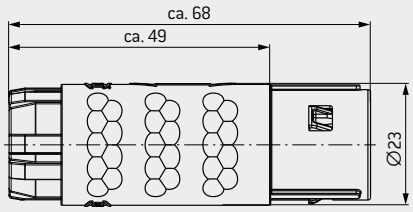

PL

2 S / 4

STYLE: 2 / 4

S2: IP50 / S4: IP68

With back nut[1] for cable bend relief[2]

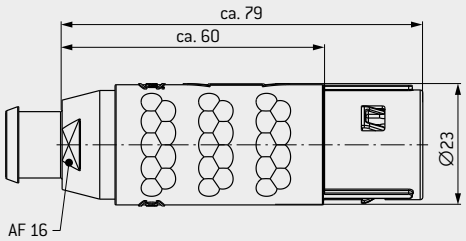

PL

TECHNICAL DATA

- Contact configuration see page 92 ff.
- Mechanical coding see page 90.
- Cable collet diameter see page 94.
- Housing material and color see page 91.
- Accessories see page 95 ff.
- IP rate in mated condition and depending on the mating receptacle

Size (3.5)

1	2	3	4	5	6	7	8	9	10	11	12	13	14	15	16	17	18	19
S		B	M			–	P							–				

[1] Back nuts for cable bend reliefs have to be ordered in the same color as the connector housing. The color coding is based on the cable bend relief. [2] Cable bend reliefs have to be ordered separately (see page 95).

RECEPTACLE

G 1

STYLE: 1

IP50

For front panel installation

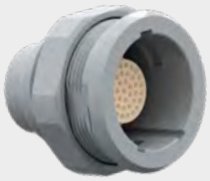

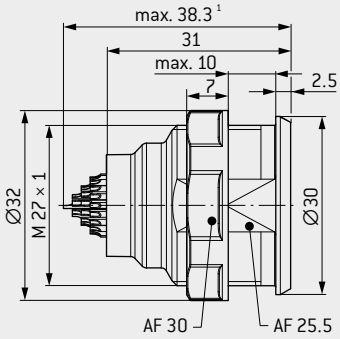

PL

[1] Fluid max. 45.3 mm

PANEL CUT-OUT

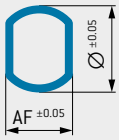

AF : 25.6 mm
Ø : 27.1 mm

8

STYLE: 8

IP50

For rear panel installation

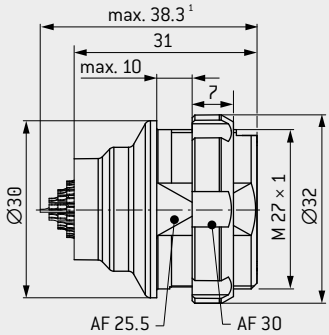

PL

[1] Fluid max. 45.3 mm

PANEL CUT-OUT

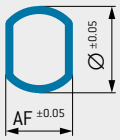

AF : 25.6 mm
Ø : 27.1 mm

TECHNICAL DATA

- Contact configuration see page 92 ff.
- Mechanical coding see page 90.
- Housing material and color see page 91.
- Style 8 color coding via front nut
- Style 1 available in Black or Gray (further colors on request)
- IP50 in mated condition
- IP50 with respect to the end device in unmated condition

Style 1, default "0"

1	2	3	4	5	6	7	8	9	10	11	12	13	14	15	16	17	18	19
G		B	M			–	P							–	0	0		1

RECEPTACLE

G E

STYLE: E

IP68

For front panel installation

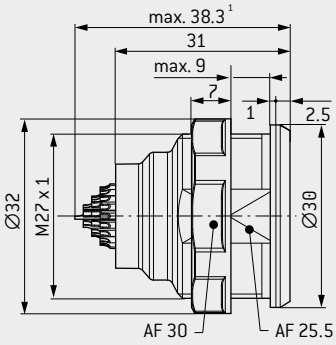

[1] Fluid max. 45.3 mm

PL

PANEL CUT-OUT

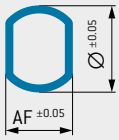

AF : 25.6 mm
Ø : 27.1 mm

C

STYLE: C

IP68

For rear panel installation

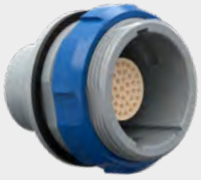

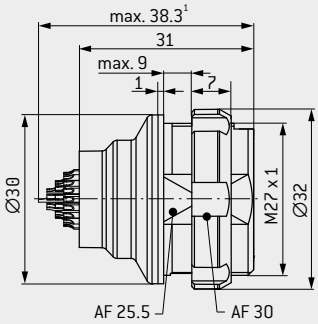

[1] Fluid max. 45.3 mm

PL

PANEL CUT-OUT

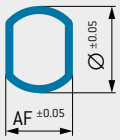

AF : 25.6 mm
Ø : 27.1 mm

TECHNICAL DATA

- Contact configuration see page 92 ff.
- Mechanical color coding see page 90.
- Housing material and color see page 91.
- Style C color coding via front nut
- Style E available in Black or Gray (further colors on request)
- IP68 in mated condition with push-pull plug style S3 or S4
- IP50 with respect to the end device in unmated condition

Size (3.5)

Style E, default "0"

1	2	3	4	5	6	7	8	9	10	11	12	13	14	15	16	17	18	19
G		B	M			–	P							–	0	0		1

RECEPTACLE

G A

STYLE: A

IP68

For front panel installation

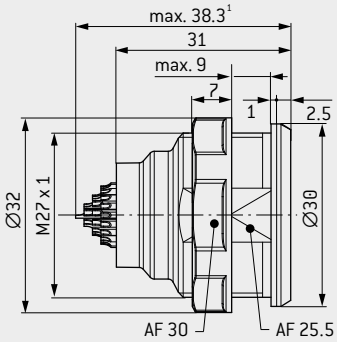

PL

[1] Fluid max. 45.3 mm

PANEL CUT-OUT

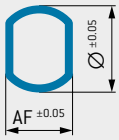

AF : 25.6 mm
Ø : 27.1 mm

D

STYLE: D

IP68

For rear panel installation

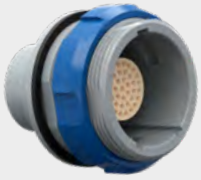

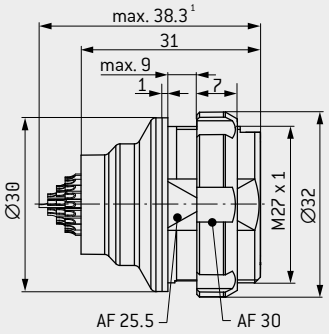

PL

[1] Fluid max. 45.3 mm

PANEL CUT-OUT

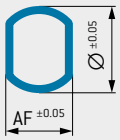

AF : 25.6 mm
Ø : 27.1 mm

TECHNICAL DATA

- Contact configuration see page 92 ff.
- Mechanical coding see page 90.
- Housing material and color see page 91.
- Style D color coding via front nut
- Style A available in Black or Gray (further colors on request)
- IP68 in mated condition with push-pull plug style S3 or S4
- IP68 with respect to the end device in unmated condition

Size (3.5)

Style A, default "0"

1	2	3	4	5	6	7	8	9	10	11	12	13	14	15	16	17	18	19
G		B	M			–	P							–	0	0		1

MECHANICAL CODING

	Angle	Receptacle front view	Plastic	
			Push-pull plug	Receptacle
F	90°		●	●
K	–		●	●
L	–		●	●

● Standard
Further codings on request

Size (3.5)

1	2	3	4	5	6	7	8	9	10	11	12	13	14	15	16	17	18	19
		B	M			–								–				

HOUSING MATERIAL AND COLOR CODING

All receptacles and color codings are autoclavable.

Color (similar classic RAL)	Material	Housing material			Color coding		
		Push-pull plug	Receptacle		Plug back nut	Receptacle front nut	
Gray (7045)	PEI [1]	● autoclavable	●	G	●	●	7
Black (9004)	PEI	● autoclavable	●	S	●	●	8
Red (3002)	PSU	○	○	2	●	●	2
White (9003)	PSU	○	○	3	●	●	3
Yellow (1016)	PSU	○	○	4	●	●	4
Green (6032)	PSU	○	○	5	●	●	5
Blue (7045)	PSU	○	○	6	●	●	6
Orange (2003)	PSU	○	○	9	○	○	9

● Standard
○ On request

For more detailed information on the topic of "autoclaving" see page 121.

[1] For information about biocompatible materials, please contact sales@odu-de
[2] Back nuts for cable bend relief have to be ordered in the same color as the connector housing. Please order bend relief separately.

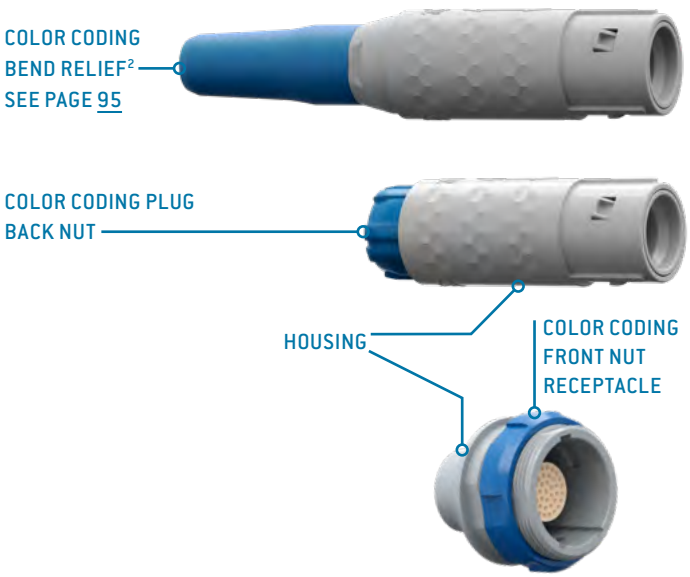

Size (3.5)

1	2	3	4	5	6	7	8	9	10	11	12	13	14	15	16	17	18	19
		B	M			–								–				

CONTACT INSERT

All working voltages, unless otherwise stated: < 50 V AC / < 75 V DC
Please refer to Technical Information for further information and also for cases where a higher voltage is needed.

Number of contacts		Contact type: Termination	Contact type: Socket	Contact type: Pin	Part number key insert			Contact diameter mm	Single contact nominal current [1] A	Nominal current insert A	Clearance and creepage distance contact to contact mm	Test voltage[2] EIA kV RMS	Termination diameter mm	Termination cross-section AWG	Termination cross-section mm²	View on termination area: Pin piece	View on termination area: Socket piece
4	1	Solder	L	M	C	D	9	0.5	6	2.4	0.5	0.750	0.65	26	0.15		

1	2	3	4	5	6	7	8	9	10	11	12	13	14	15	16	17	18	19
		B	M			–	P	4	1		C	D	9	–				

Size (3.5)

Reversed gender variants possible

[1] Derating factor, see page 116.
[2] Acc. to EIA-364-20F:2019-02, further information on voltage rating see page 110

SPECIAL-CONTACT INSERT

19 position hybrid insert for fluid and signals

Number of contacts		18 x signal contacts 1x fluid feedthrough: Termination	Socket	Pin	Part number key insert			Signal contacts: Contact diameter mm	Single contact nominal current [1] A	Nominal current insert A	Clearance and creepage distance contact to contact mm	Test voltage[2] EIA kV RMS	Termination diameter mm	Termination cross-section AWG	Termination cross-section mm²	Fluid feedthrough: Contact inner diameter mm	Termination diameter mm	Max. outer tube diameter mm	Max. working pressure[3] bar	View on termination area: Pin piece	View on termination area: Socket piece
1	9	solder / nipple fitting	L	M	Y	1	9	0.7	7.5	3.75	0.5	0.750	0.85	22	0.38	1.9	3.0	5.0	4.0		

Size (3.5)

1	2	3	4	5	6	7	8	9	10	11	12	13	14	15	16	17	18	19
		B	M			–	P	1	9		Y	1	9	–				

Reversed gender variants possible

[1] Derating factor, see page 116.
[2] Acc. to EIA-364-20F:2019-02, further information on voltage rating see page 110
[3] With PUR tube

Table of contents

PLASTIC HOUSING
SIZE 3.5

CABLE COLLET SYSTEM

For strain relief of push-pull plugs

		Cable diameter mm	Material
6	0	> 4.6 – 6.0	PSU (IP50) PA (IP68)
7	5	> 6.1 – 7.5	
9	0	> 7.6 – 9.0	
0	2	> 9.1 – 10.5	

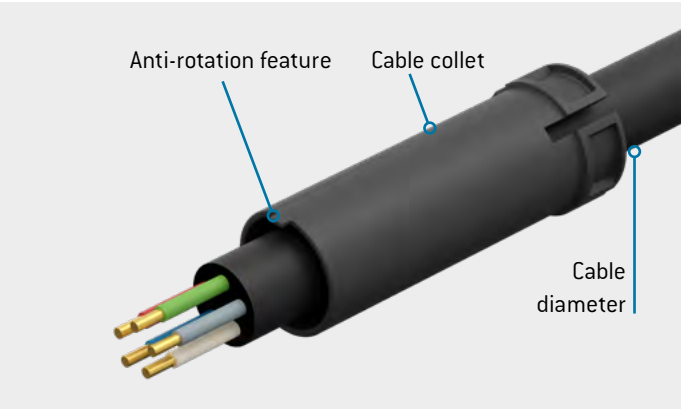

Size (3.5)

1	2	3	4	5	6	7	8	9	10	11	12	13	14	15	16	17	18	19
		B	M		7	–	P							–				

For support and customer specific solutions: **sales@odu.de**

CABLE BEND RELIEF

SILICONE CABLE BEND RELIEF

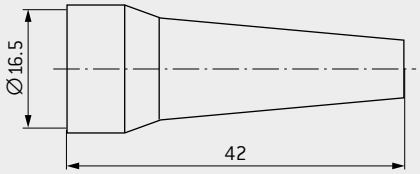

Order number for bend relief only	Cable diameter	
	min.	max.
703.023.___.965.040	4	5
703.023.___.965.050	5	6
703.023.___.965.060	6	7
703.023.___.965.070	7	8
703.023.___.965.080	8	9
703.023.___.965.090	9	10
703.023.___.965.100	10	11

Color code	Similar classic RAL
202	Red (3020)
203	White (9003)
204	Yellow (1016)
205	Green (6032)
206	Blue (7045)
207	Gray (7045)
208	Black (9004)

For support and customer specific solutions: **sales@odu.de**

TRANSPORTATION CAP

Applicable to all straight plugs

TRANSPORTATION CAP

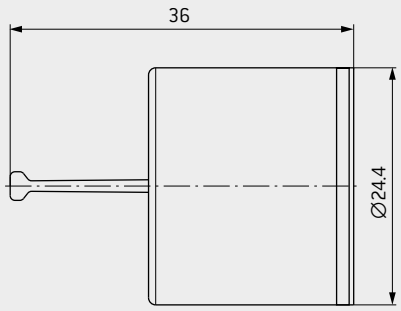

Part number	Material	Color (similar classic RAL)
922.000.002.000.084	TPE	Yellow (1016)

PLASTIC HOUSING SIZE 3.5

Table of contents

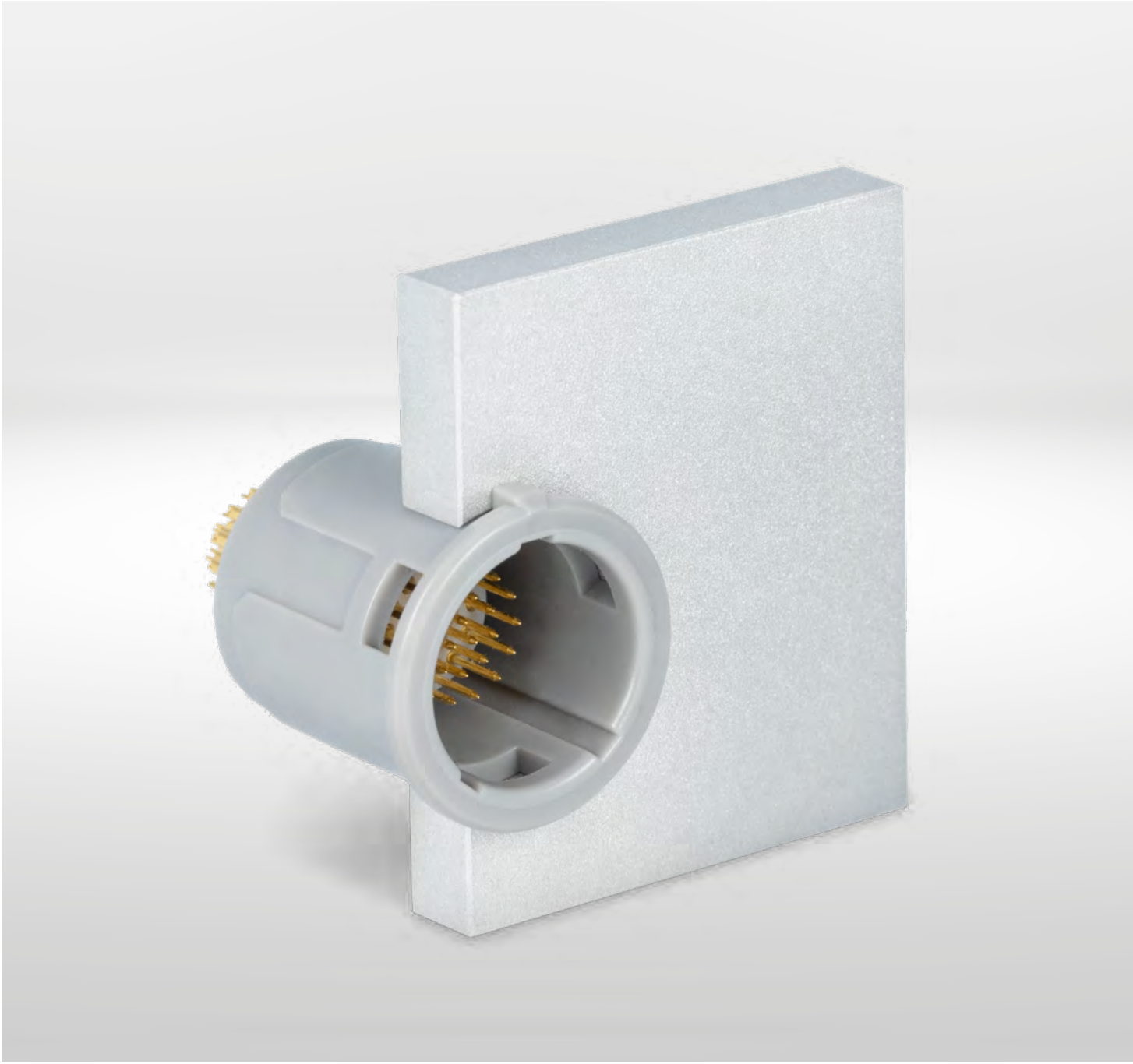

ODU MEDI-SNAP®

ODU DISPOSABLE SOLUTIONS

Summary and examples

SUMMARY
ODU DISPOSABLE SOLUTIONS

The ODU MEDI-SNAP® Disposable products offer a reliable and economical limited use solution for large-volume projects that can be used for at least 25 mating cycles.

TAILORED TO YOUR APPLICATION

- Large selection of different numbers of pin count
- Various sizes
- Large selection of cables on request
- Various colors on request

FURTHER ADVANTAGES AT A GLANCE

Intermateable with the ODU MEDI-SNAP® series – mating connectors are
- Sterilizable, autoclavable
- Durable – up to 5.000 mating cycles

IEC 60601-1 compliant:
- Up to 2 MOPP / 2 MOOP
- Up to 15 kV ESD test voltage

Total cost of ownership in focus:
- Optimized manufacturing technologies / assembly processes
- Complete assembled system solutions

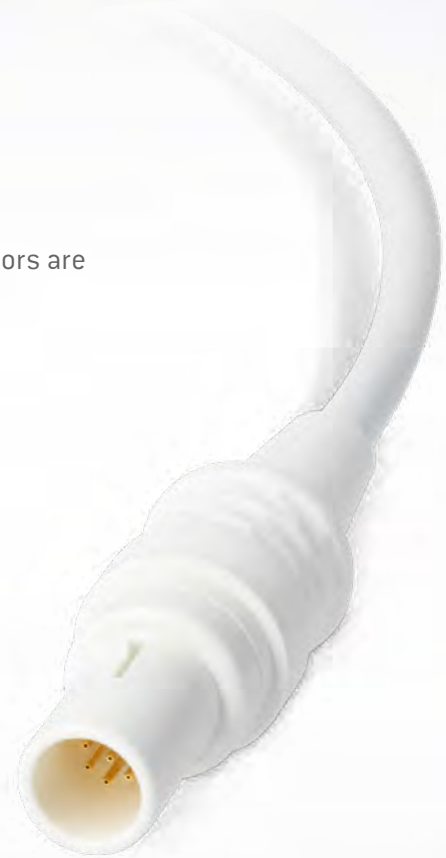

ODU OFFERS SOLUTIONS FOR THE FOLLOWING APPLICATIONS

- Dermatology
- Endoscopy
- Respirator
- Patient monitoring
- And many more

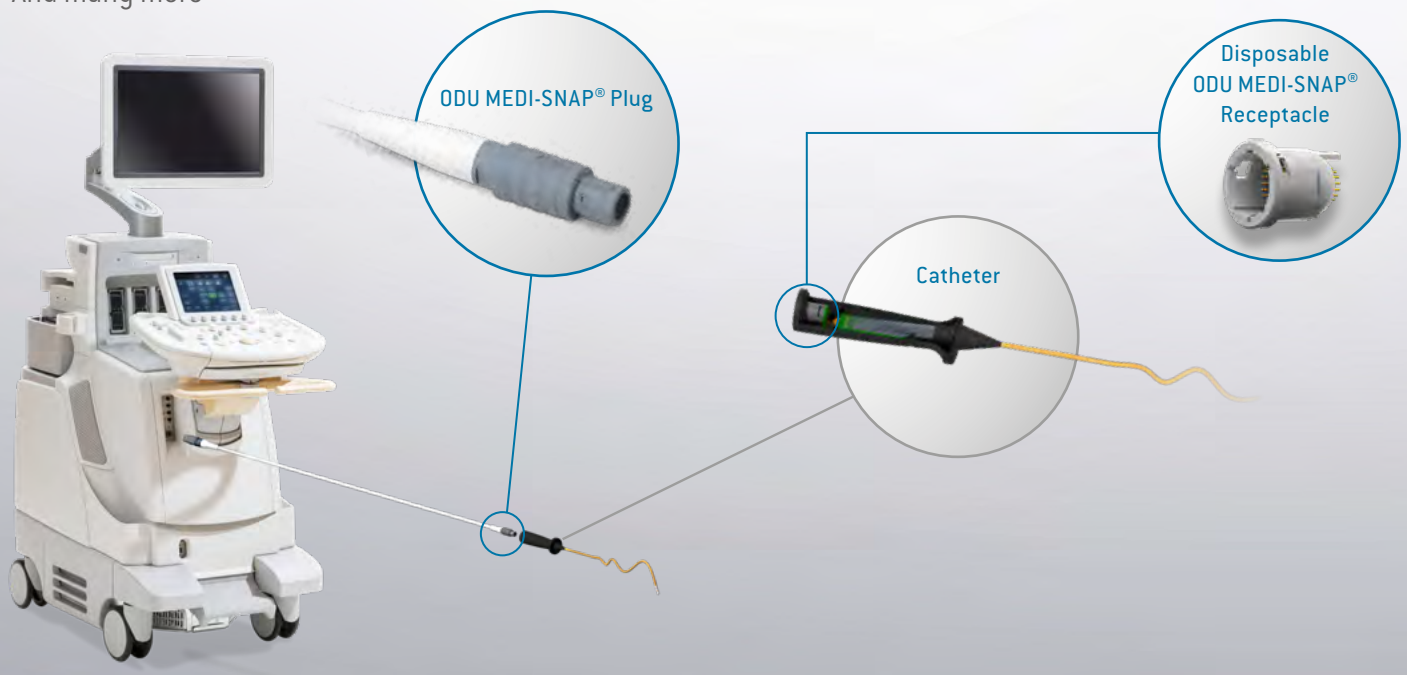

EXAMPLES FOR DISPOSABLE SOLUTIONS

ODU MEDI-SNAP®

Plug cable assembly size1

- Style A6
- Up to 8 contacts
- Intermateable with receptacles which have up to 5,000 mating cycles

See also receptacles size 1 (p.34 ff)

ODU MEDI-SNAP®

Snap-in receptacle size 1

- Style G2
- Up to 14 contacts
- Match also with metal plugs

See also overview plugs size 1 (p.26)

ODU MEDI-SNAP®

Snap-in receptacle size 2

- Style GB
- Up to 34 contacts (high density)
- 2 MOOP / 1 MOPP

ODU MINI-MED®

plug cable assembly and panel mount receptacle

- Up to 6 contacts
- Smallest footprint

See also ODU MINI-MED® Brochure

ODU MEDI-SNAP®

TOOLS

The following pages contain tools and wrenches to ensure that your ODU connectors function flawlessly.

CRIMPING TOOLS / ASSEMBLY TOOLS

PART NUMBER CRIMPING TOOL
080.000.051.000.000

Part number positioner, see table

PROCESSING TOOL FOR CRIMP CONTACTS

Digital adjustment, multiposition

Size	Number of contacts	Contact diameter	Termination cross-section		Adjustment dim.	Positioner	Positioning setting		Removal tool
		mm	AWG	mm²	mm		Pin	Socket	
1	6 to 8	0.7	24 – 26	0.25 – 0.15	0.67	080.000.051.109.000	9	3	087.7CC.070.001.000
			22 – 26	0.38 – 0.15	0.67	080.000.051.109.000	9	3	087.7CC.070.001.000
	4 to 5	0.9	22 – 26	0.38 – 0.15	0.67	080.000.051.109.000	8	2	087.7CC.090.001.000
			20 – 24	0.50 – 0.25	0.67	080.000.051.109.000	8	2	087.7CC.090.001.000

PART NUMBER CRIMPING TOOL
080.000.037.000.000

Part number positioner, see table

PROCESSING TOOL FOR CRIMP CONTACTS

Mil approved, single position

Size	Number of contacts	Contact diameter	Termination cross-section		Positioner		Selector setting		Removal tool
		mm	AWG	mm²	Pin	Socket	Pin	Socket	
1	6 to 8	0.7	22 – 26	0.38 – 0.15	081.KM1.001.948.037	081.KM1.001.948.037	4	4	087.7CC.070.001.000
		0.7	24 – 26	0.25 – 0.15	081.KM1.001.948.037	081.KM1.001.948.037	4	4	087.7CC.070.001.000
	4 to 5	0.9	20 – 24	0.50 – 0.25	081.704.001.849.037	081.KM1.001.949.037	7/6/5[1]	7/6/5[1]	087.7CC.090.001.000
		0.9	22 – 26	0.38 – 0.15	081.704.001.849.037	081.KM1.001.949.037	4	4	087.7CC.090.001.000
	Coax	0.5	26	0.15	081.122.121.001.037	081.122.121.002.037	3	3	–

[1] For AWG 20 position 7/for AWG 22 position 6/for AWG 24 position 5

CRIMPING TOOLS / ASSEMBLY TOOLS

PART NUMBER CRIMPING TOOL
080.000.039.000.000

Part number positioner, see table

PROCESSING TOOL FOR CRIMP CONTACTS
Crimp tool for coax contacts, hexagonal

Size	Number of contacts	Contact diameter mm	Termination cross-section	Crimp dies
1	Coax	0.7	Shield	082.000.039.102.001

ASSEMBLY TOOL
Assembly tool for coax size 1

Size	Number of contacts	Part number
1	Coax	085.122.121.000.000

SPANNER WRENCH

Size	Use	Part number	Recommended tightening torque Nm	Dimensions in mm AF	t	B	L	b
1	Receptacle hex nut	598.700.001.008.000	1.0	17	3	35.5	145	15
1	Plug style S2, S4, W2, K2, K6 back nut	598.700.001.022.000	0.25	9	2	21.5	102	9
1	Right angled plug clamping cap	598.700.001.012.000	0.3	11	2	24.5	115	10
1	Straight version break-away plug	598.700.001.012.000	0.3	11	2	24.5	115	10
2	Receptacle slotted nut	KM2.098.002.923.008	1.0	for slotted mounting nut, see picture below				
2	Plug style style S4 back nut	598.700.001.002.000	0.5	10	2	21.5	102	9
2	Straight version break-away plug	598.700.001.005.000	0.5	14	2.5	30.5	98	16.5
3.5	Receptacle hex nut	598.700.001.019.000	2.0	30	3	50	150	25
3.5	Plug style S2 and S4 back nut	598.700.001.013.000	1.5	19	3	42	172	16

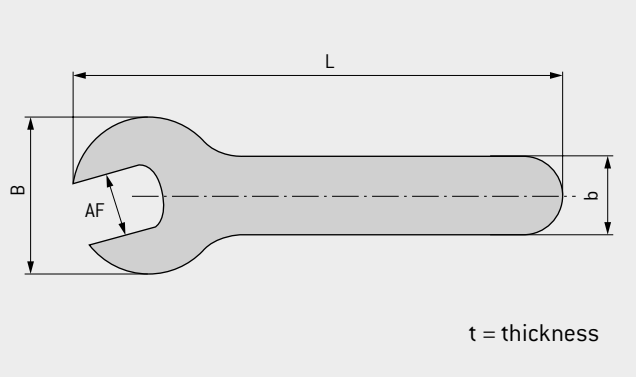

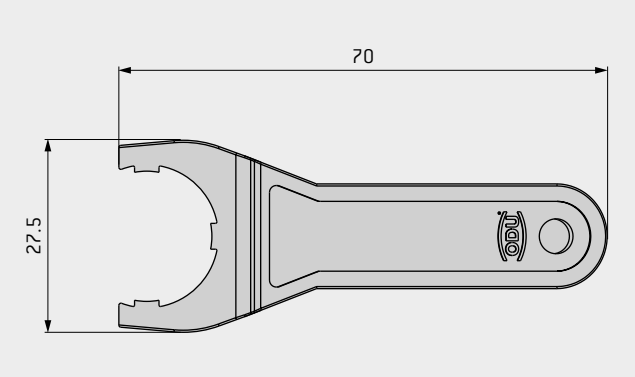

BOX SPANNER FOR RECEPTACLE FRONT NUTS

Part number	Size	Material front nut	Applicable for style
KM1.098.001.923.008	1	Plastic	G5, G6, G8
KM1.098.002.902.000	1	Metal	G5, GK
KM2.098.001.923.008	2	Plastic	G5
KMB.098.001.000.000	3.5	Plastic	G8, GC, GD

REMOVAL TOOLS FOR CRIMP-CLIP-CONTACTS

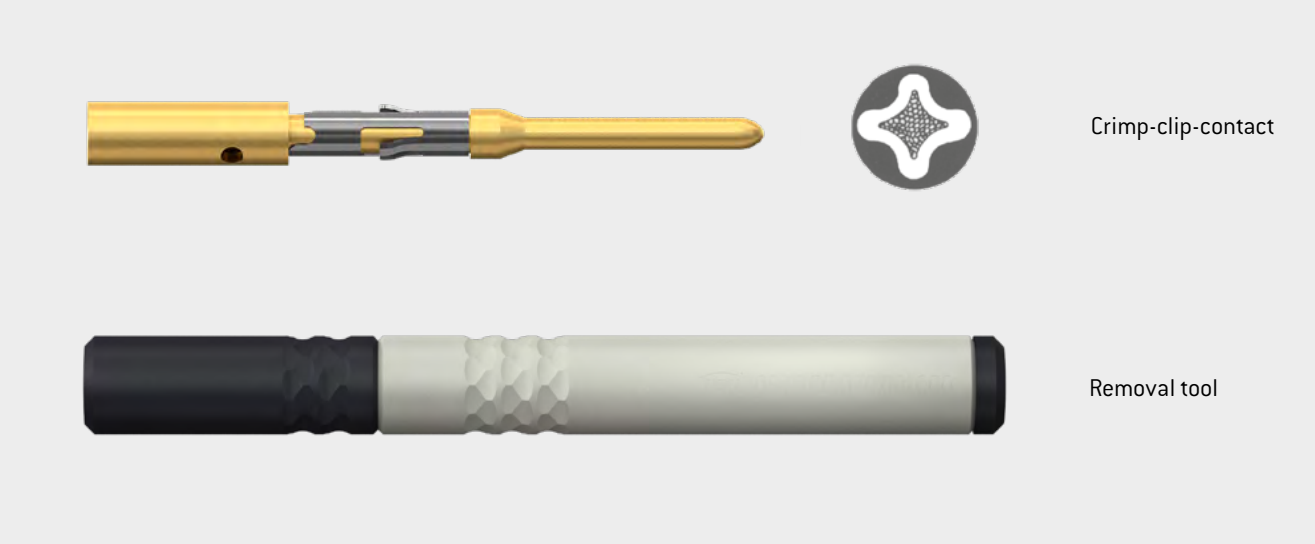

Part number	Contact ⌀ mm
087.7CC.070.001.000	0.7
087.7CC.090.001.000	0.9

NOTE ON ADHESIVE !

Recommended adhesive for the back nut
Scotch-Weld™, DP 190 (Gray)
ODU PART NUMBER: 890.204.000.030.025

Recommended cleaning agent: Isopropyl alcohol

Caution! Cracks may appear later if unauthorized adhesives and cleaning agents are used

For assembly instructions, please refer to our website: www.odu-connectors.com/downloads/assembly-instructions

ODU MEDI-SNAP®

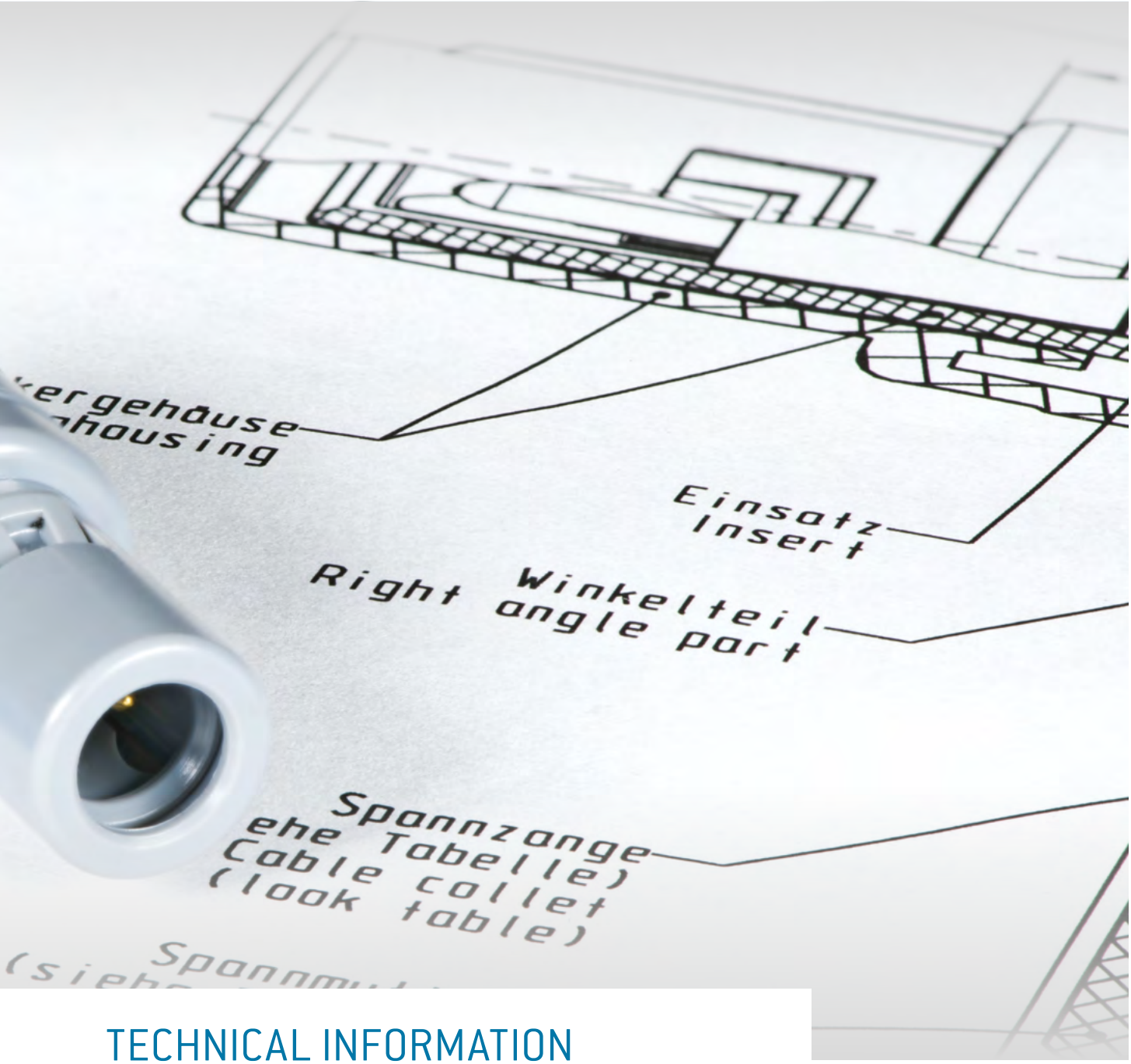

TECHNICAL INFORMATION

ODU connectors ensure perfect and reliable transmission of power, signal, data and other media in a wide variety of applications.

Further information can be found on the following pages.

EXPLANATIONS AND INFORMATION ON SAFETY REQUIREMENTS

GENERAL

All the technical information listed in this catalog has been determined by drawing on various standards. Unless otherwise stated, standard IEC 61984:2008 (VDE 0627:2009-11) "Connectors – Safety requirements and tests" has been used to dimension and determine the values provided.
This international standard applies to connectors and cable assemblies with rated voltages above 50 V and up to 1,000V AC and DC and rated currents up to 125 A per contact, for which either no detail specification exists or the detailed specification calls up this standard for safety aspects. For connectors with rated voltage up to 50 V, this standard may be used as a guide. In this case, reference is made to IEC 60664-1 for clearance and creepage distances. This standard may also be used as a guide for connectors with rated current higher than 125 A per pole. This standard does not apply to connectors in or on equipment where application specific safety requirements for connectors exist.

All the connectors and cable assemblies shown here are without breaking capacity (COC) according to IEC 61984:2008 (VDE 0627:2009-11).

All of the voltage data listed in this catalog is only valid when the connectors and inserts and cable assemblies have been correctly mounted and are being used properly.

EXPLANATIONS AND INFORMATION ON VOLTAGE RATINGS FOR LOW VOLTAGE INSERTS

GENERAL WORKING VOLTAGE (RATED VOLTAGE)

All shown connectors and cable assemblies with the exemption of inserts with explicitly stated operating voltage (for example mains and high voltage inserts) are default rated to fulfil safety extra low voltage (SELV), based on IEC 61140:2016 (VDE 0140-1:2016-11) "Protection against electric shock – Common aspects for installation and equipment". The connectors and cable assemblies are default rated to a voltage of less than 50 V AC / 75 V DC. If the application requires a higher operating voltage and the standard EIA-364-20F:2019-02 is applicable, please refer to the following section. In case other standards rule a specific use of the connector, then the application specific safety criteria shall be considered first. These other standards must be evaluated during the engineering and design of the equipment.

VOLTAGE RATING ACCORDING EIA-364-20F:2019-02 (TEST VOLTAGE / WITHSTANDING VOLTAGE)

Caution: For operating voltages above 50 V AC / 120 V DC, life is in danger!

The test voltage values in the catalog are determined according to EIA-364-20F:2019-02 method A, test condition I (sea level up to 2,000 m) "Withstanding Voltage – Test Procedure for Electrical connectors, Sockets and Coaxial Contacts". The test voltage represents the physical limit of the connectors and cable assemblies and is usually set at 75 % of the break-down voltage. According to EIA-364-20F:2019-02 and former MIL-STD-1344 method 3001 it is specified to set the operating voltage (rated voltage) to 1/3 of the test voltage acc. to EIA-364-20F:2019-02 method A, test condition I (sea level up to 2,000 m). Please note, the subsequently explained procedure according to EIA-364-20F:2019-02 does not consider protection against electric shock. Suitable precautions (protective measures) such as touch protection, protective insulation, protective separation, protective earth conductor etc. must be implemented.
Please consult us for advice on how the proper connector and cable assembly can be chosen and thereby indicate the safety standard, which your product has to meet.

EXPLANATIONS AND INFORMATION ON VOLTAGE RATINGS AND SAFETY REQUIREMENTS FOR MAINS AND HIGH VOLTAGE INSERTS

The clearance and creepage distances are determined as specified in IEC 60664-1:2020 (VDE 0110-1:2022-07). In case other standards rule a specific use of the connector and/or cable assembly, then the application specific safety criteria shall be considered first. The most important variables that influence safety together with the matching electrical parameters are explained in more detail below in the section IEC 60664-1:2020 (VDE 0110-1:2022-07) "Insulation coordination for equipment within low-voltage systems".

Since this catalog cannot take all product standards into consideration, the following standard in terms of voltage data is used:

IEC 60664-1:2020 (VDE 0110-1:2022-07) "INSULATION COORDINATION FOR EQUIPMENT WITHIN LOW-VOLTAGE SYSTEMS" (The texts given here are excerpts from the standard)

According to this standard, the minimum clearance distances for equipment not connected directly to the low voltage mains should be measured according to

- the possible continuous voltages,
- the temporary overvoltages, or
- periodic peak voltages

(see Table F.8 / F.9 in IEC 60664-1:2020 (VDE 0110-1:2022-07)).
This is what is known as a basic safety standard, which regulates the minimum requirements for dimensioning clearance and creepage distances, as well as their inspection. The standard applies to equipment used up to an altitude of 2,000 m above sea level and with a rated alternating voltage of up to 1,000 V and a nominal frequency of up to 30 kHz or a rated direct voltage of up to 1,500 V. The correction factors stated in the standard must be taken into account for applications at altitudes over 2,000 m above sea level. This standard covers those cases where corresponding product standards do not define any values for clearance and creepage distances, nor lay down any requirements for solid insulation, or where no product standards are even available.

The following general specifications have been defined for the dimensioning of mains and high-voltage inserts:

- The clearance (based on inhomogeneous field) and creepage distances (based on pollution degree 3 in mating area) are determined as specified in this standard.
- Isolation between electrical circuits (functional insulation between the contacts) or between an electrical circuit and local grounding (contact with grounded connector components) has been defined as basic insulation. If "double insulation" or "reinforced insulation" is required in your application, the voltage data provided in this catalog is no longer valid.

In the following explanations, the term "nominal voltage" is the value of the given voltage as indicated by the utility or mains supplier for classification of the overvoltage category.

DIMENSIONING OF RATED SURGE VOLTAGE

Value of an impulse withstand voltage that is indicated by the manufacturer for equipment or a part thereof, and which indicates the defined endurance of its insulation against transient (brief, duration of a few milliseconds) over-voltages. The impulse withstand voltage is the highest value of the surge voltage of a defined form and polarity which will not result in the dielectric breakdown of the insulation under defined conditions. Depending upon the indicated pollution degree, the rated surge voltage varies in accordance with the clearance distance between the individual contacts or contacts to the housing (see Table F.2 in IEC 60664-1:2020 (VDE 0110-1:2022-07)). The corresponding rated surge voltages for the connectors and cable assemblies can be determined in this manner if the loads with transient over-voltages in the application need to be taken into account.

If a “periodic peak voltage” is present for a long time over the service life (more than approximately 60 minutes), this is not an over-voltage as regards insulation dimensioning under the terms of the standard, but must be considered a continuous voltage instead. In such cases, the 'periodic peak voltage” must be used as the operating voltage.

INFLUENCE OF POLLUTION DEGREE ON THE INSULATION COORDINATION

Any pollution combined with moisture can influence the insulation capacity on the surface of the connector. In order to define various rating parameters, a pollution degree must be selected for the equipment according to the criteria listed below.

All the technical specifications of the mains and high voltage inserts in this catalog are based on pollution degree 3.

Pollution degree 3 is used, for example, for devices in industrial, commercial, and agricultural operations, unheated storage areas, and workshops. Conductive pollution is present or dry, non-conductive pollution that will become conductive because condensation is expected.

Higher voltages may be possible if the pollution degree is defined as less than 3.
Please contact us for more details about the connectors performance specified for pollution degree 2 or 1.

HOUSING MATERIALS / SURFACES

Component	Material designation	Surface
Housing	PSU / PEI / Brass	Chrome (metal version)
Back nut / Cable collet / Front nut / Mounting nut	PSU / PEI / PA	
Insulator	PEEK / PBT / PSU	
Hex nut	Brass	Ni
Contacts	Brass	Au

INSULATOR MATERIALS (ROHS 2011/65/EU COMPLIANT)

	Norm	Unit	PEEK	PBT	PSU
Flammability rating	UL 94	—	V – 0 / 1.5	V – 0 / 1.5	V – 0 / 4.5
Operation temperature	—	C	–50 to +250°	–50 to +180°	–50 to +170°
Dielectric strength	IEC 60243-1:2013 (VDE 0303-21:2014-01)	kV/mm	19	27	17
Comparative figure of the creep resistance CTI	IEC 60112: 2003 (VDE 0303-11:2010-05)	—	175	600	150
Water absorption	ASTM D 570:1998 / ISO 62:2008-02	%	0.1	0.3	0.3
Insulation resistance	IEC 60512-3-1:2002 (DIN EN 60512-3-1:2003-01)	Ω	$> 1 \times 10^{12}$ Ω	$> 1 \times 10^{12}$ Ω	$> 1 \times 10^{12}$ Ω

All values in the new condition

TERMINATION TECHNOLOGIES

In general, insulators with socket contacts are installed in the live part (to provide protection from accidental touch). The means of mounting the contacts in the insulator is important on account of the termination technologies. Termination technologies for ODU MEDI-SNAP® connectors include: soldering, crimping and PCB.

SOLDER TERMINATION

CRIMP-CLIP-CONTACT FOR PEEK INSULATOR

PRINT TERMINATION

TERMINATION TECHNOLOGIES FOR TURNED CONTACTS

Solder termination

The contacts are mounted in the insulator before the single connectors are assembled.
An insulator with pre-installed contacts is referred to as a contact insert.

Crimp termination

Here, the individual contact is connected to the individual wires via deformation in the termination area. Then the contacts are individually installed in the insulator. Accordingly, insulators and individual contacts – and not complete contact inserts – are supplied for the crimp termination. The contact processing for the production of connecting cables via crimping creates a secure, durable and corrosion-free contact. Cold compaction (crimping) compresses the conductor and contact material to the press points so as to form a gas-tight connection with tensile strength to fit the conductor material. 8-point deformation is generally used for turned crimp contacts.

PCB termination

This is only used in the receptacle if the receptacle is to be mounted directly on a printed circuit board (PCB).
Further information is available upon request.

CONVERSIONS/AWG (AMERICAN WIRE GAUGE)

Circular wire					
AWG	Diameter		Cross-section	Weight	Max. resistance
	Inch	mm	mm²	kg/km	Ω/km
10 (1)	0.1019	2.590	5.26	46.77	3.45
10 (37/26)	0.1150	2.921	4.74	42.10	4.13
12 (1)	0.0808	2.050	3.31	29.41	5.45
12 (19/25)	0.0930	2.362	3.08	27.36	6.14
12 (37/28)	0.0910	2.311	2.97	26.45	6.36
14 (1)	0.0641	1.630	2.08	18.51	8.79
14 (19/27)	0.0730	1.854	1.94	17.23	9.94
14 (37/30)	0.0735	1.867	2.08	18.870	10.50
16 (1)	0.0508	1.290	1.31	11.625	13.94
16 (19/29)	0.0590	1.499	1.23	10.928	15.70
18 (1)	0.0403	1.020	0.823	7.316	22.18
18 (19/30)	0.0052	1.321	0.963	8.564	20.40
20 (1)	0.0320	0.813	0.519	4.613	35.10
20 (7/28)	0.0390	0.991	0.563	5.003	34.10
20 (19/32)	0.0420	1.067	0.616	5.473	32.00
22 (1)	0.0253	0.643	0.324	2.883	57.70
22 (7/30)	0.0288	0.732	0.324	2.965	54.80
22 (19/34)	0.0330	0.838	0.382	3.395	51.80
24 (1)	0.0201	0.511	0.205	1.820	91.20
24 (7/32)	0.0250	0.635	0.227	2.016	86.00
24 (19/36)	0.0270	0.686	0.241	2.145	83.30
26 (1)	0.0159	0.404	0.128	1.139	147.00
26 (7/34)	0.0200	0.508	0.141	1.251	140.00
26 (19/38)	0.0220	0.559	0.154	1.370	131.00
28 (1)	0.0126	0.320	0.0804	0.715	231.00
28 (7/36)	0.0160	0.406	0.0889	0.790	224.00
28 (19/40)	0.0170	0.432	0.0925	0.823	207.00
30 (1)	0.0100	0.254	0.0507	0.450	374.00
30 (7/38)	0.0130	0.330	0.0568	0.505	354.00
30 (19/42)	0.0123	0.312	0.0720	0.622	310.00
32 (1)	0.0080	0.203	0.0324	0.288	561.00
32 (7/40)	0.0110	0.279	0.0341	0.303	597.10
32 (19/44)	0.0100	0.254	0.0440	0.356	492.00
34 (1)	0.0063	0.160	0.0201	0.179	951.00
34 (7/42)	0.0070	0.180	0.0222	0.197	1,491.00
36 (1)	0.0050	0.127	0.0127	0.1126	1,519.00
36 (7/44)	0.0060	0.150	0.0142	0.1263	1,322.00

The American Wire Gauge (AWG) is based on the principle that the cross-section of the wire changes by 26 % from one gauge number to the next. The AWG numbers decrease as the wire diameter increases, while the AWG numbers increase as the wire diameter decreases. This only applies to solid wire.

However, stranded wire is predominately used in practice. This has the advantage of a longer service life under bending and vibration as well as greater flexibility in comparison with solid wire.

Stranded wires are made of multiple, smaller-gauge wires (higher AWG number). The stranded wire then receives the AWG numbers of a solid wire with the next closest cross-section to that of the stranded wire. In this case, the cross-section of the stranded wire refers to the sum of the copper cross-sections of the individual wires.

Accordingly, strands with the same AWG number but different numbers of wires differ in cross-section. For instance, an AWG 20 strand of 7 AWG 28 wires has a cross-section of 0.563 mm², while an AWG 20 strand of 19 AWG 32 wires has a cross-section of 0.616 mm².

Source: ASTM

CURRENT LOAD OF TURNED CONTACTS

Nominal single contact current load for pin / slotted socket (nominal diameter 0.5 mm – 2 mm)

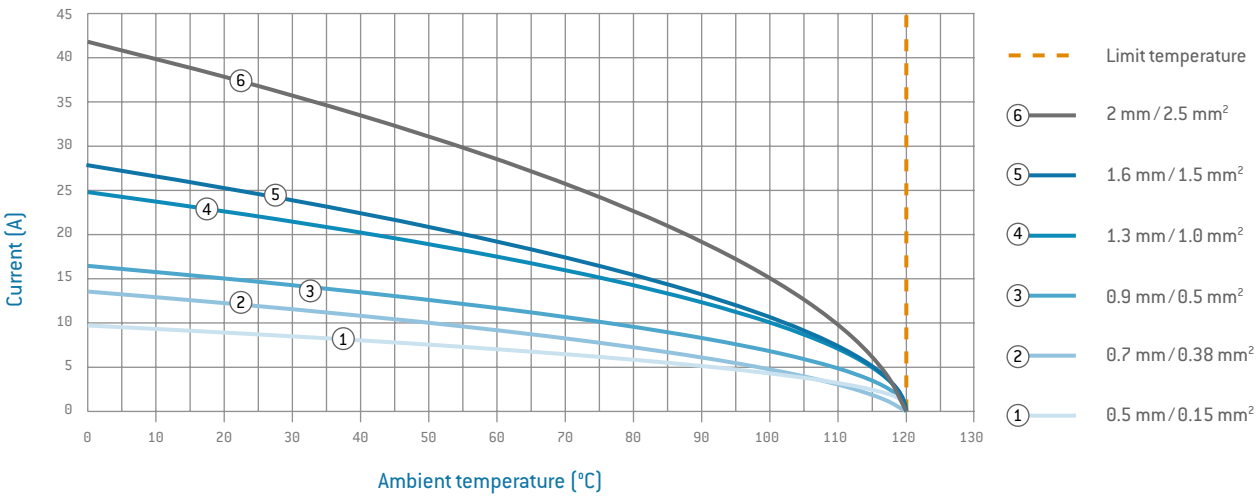

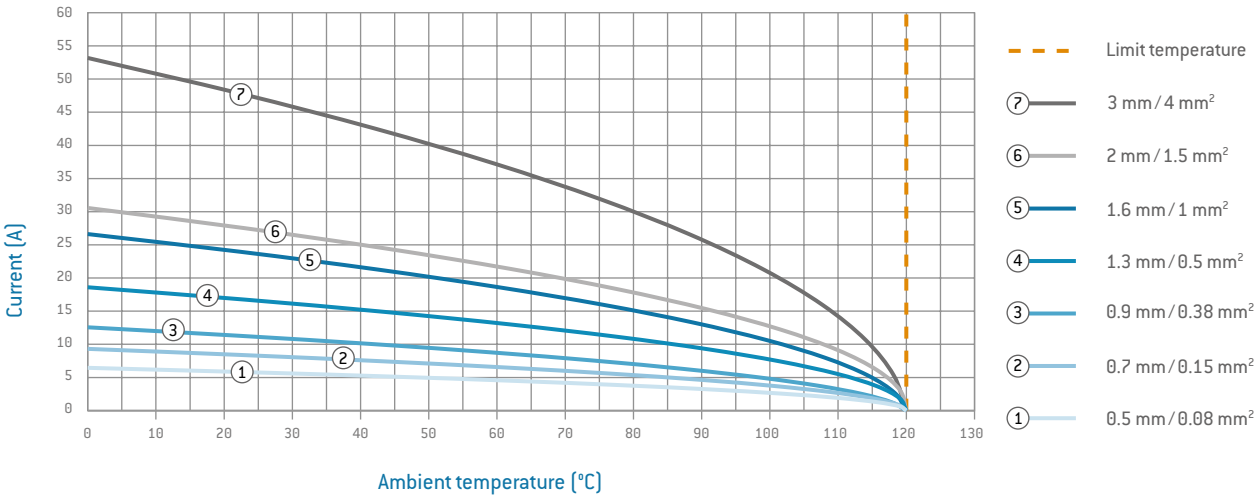

UPPER LIMIT TEMPERATURE OF STANDARD CONTACTS: +120 °C

The wire cross-section shown in the legend was connected as test cable. In the case of multi-position connectors and cables, the heating is greater than it is with individual contacts. For that reason, it is calculated with a reduction factor. For connectors, the reduction factors for multi-core cables pursuant to VDE 0298-4:2013-06 are applied.
The reduction factor is factored in at 5 live wires and up.

DERATING CURVE

The corrected current-carrying capacity curve, derived from the base curve determined (0.8 x measured current). It factors in manufacturing tolerances as well as uncertainties in temperature measurement and measurement arrangement, see derating measurement method.

RATED CURRENT (NOMINAL CURRENT)

The metrologically determined current which is permitted to flow continuously through all contacts at the same time and will increase the contact temperature by 45 Kelvin.
The amperage is determined according to the derating measurement method (IEC 60512-5-2:2002 (DIN EN 60512-5-2:2003-01)) and derived from the derating curve.

DERATING FACTOR

Number of loaded wires	Derating factor
5	0.75
7	0.65
10	0.55
14	0.5
19	0.45
24	0.4

Table of contents

TECHNICAL INFORMATION

IEC 60601-1:2005 (3RD EDITION)

The ODU MEDI-SNAP® (plastic connectors only) offers a maximum on electrical safety, in particular the highest patient protection against electrical shock according IEC 60601-1:2005 (VDE 0750-1:2013-12). Mainly in applications located in the direct proximity to patients and operators, the approval authorities place maximum requirements on the electrical safety of medical products and the well-being of patients.

This includes:

1. MEANS OF PROTECTION
2. ELECTRICAL DISCHARGE TEST (ESD)
3. ELECTRICAL FINGER TEST

1. MEANS OF PROTECTION

In order to protect patients as well as operators from the risk of electrical shock from live devices, medical devices must ensure suitable means of protection. Depending on application and regulations, the specification of means of protection can differ.

Direct patient environment according IEC 60601-1:2005 requires two means of protection for both patients and operators must be applied in electrical medical equipment and systems (2 MOPP and/or 2 MOOP). This approach ensures, if one means of protection fails, the other takes effect.

The following table is valid for a electrical medical device with a working mains voltage of max. 250 V AC (degree of pollution 2).

To ensure the required clearance and creepage distance in the termination area of plug style A5, a corresponding potting sleeve must be used (not included in the scope of delivery).

Classification	Insulation	Creepage / distances	Creepage distance extension
1 MOOP	1,500 V AC	2.5 mm	Basic
2 MOOP	3,000 V AC	5 mm	Double
1 MOPP	1,500 V AC	4 mm	Basic
2 MOPP	4,000 V AC	8 mm	Double

To guarantee the means of protection described, the corresponding clearance and creepage distances to touchable conductive components in mated condition must be ensured.

The measurement of clearance and creepage is visualized based on the cross sectional view of a mated pair ODU MEDI-SNAP® size 1 (receptacle style G4, plug style S1).

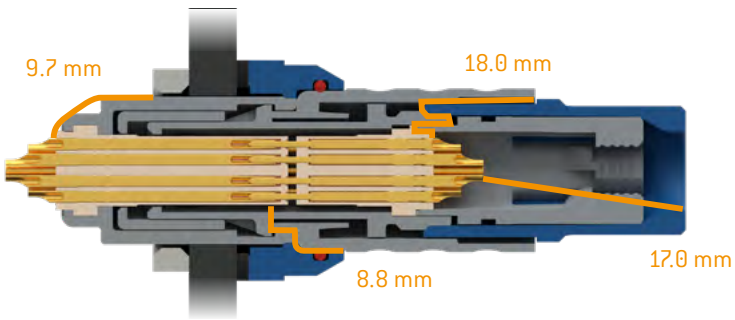

The particular means of protection are valid for all available contact inserts. Please see the corresponding means of protection of each individual connector style at the connector details.

IEC 60601-1:2005 (3RD EDITION)

2. ELECTRICAL DISCHARGE TEST (ESD)

The ODU MEDI-SNAP® withstand electrical discharge up to ± 15 kV (air)[1]. Therefore, the connector is perfectly secured against voltage punctures from outside. Such voltage punctures can cause malfunctions or other electrical safety problems which need to be avoided in mated condition.

Environmental phenomena	Reference	Test specification
Electrostatic discharge (ESD), enclosure port	IEC 61000-4-2:2008	Contact ± 8 kV Air ± 15 kV
Electrostatic discharge (ESD), patient coulping port	IEC 61000-4-2:2008	Contact ± 8 kV Air ± 15 kV
Electrostatic discharge (ESD), signal input/output coulping port	IEC 61000-4-2:2008	Contact ± 8 kV Air ± 15 kV

[1] Valid for plastic connectors in mated condition

- Size 1: receptacle style G4, G9, GE, GA
- Size 2: receptacle style G4
- Size 3.5: all receptacles listed in the catalog

3. ELECTRICAL FINGER TEST

The finger test ensures that in unmated condition the electrical contacts are not accessible. This is the case for all ODU MEDI-SNAP® connectors with socket inserts shown in this catalog. (Exemplary see size 2 receptacle style G5)

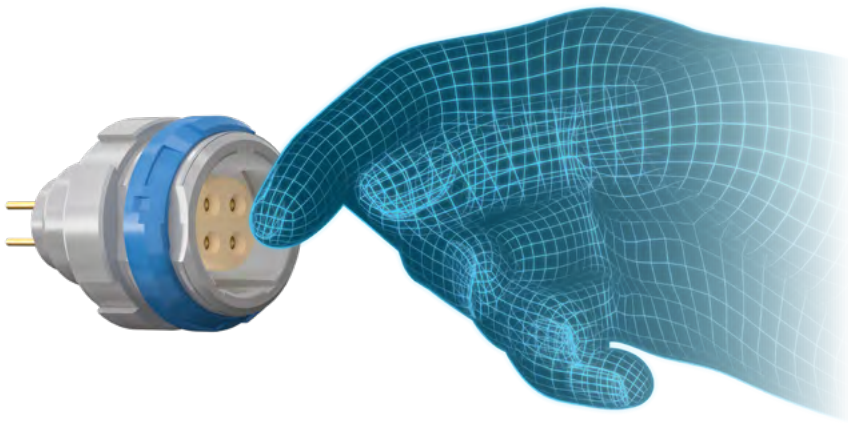

INTERNATIONAL PROTECTION CLASSES

Acc. IEC 60529:1989 (VDE 0470-1:2014)

Code letters (International Protection)	First code number (Degrees of protection against access to hazardous parts respectively against solid foreign objects)			Second code number (Degrees of protection against water)			
IP	6			5			
Code number	Protection against access to hazardous parts / Protection against ingress of solid foreign objects			Code number	Protection against harmful effects due to the ingress of water		
0	No protection		No protection against contact / No protection against solid foreign objects	0	No protection against water		No protection against water
1	Protection against large foreign objects		Protection against contact with the back of the hand / Protection against solid foreign objects Ø ≥ 50 mm	1	Protection against dripping water		Protection against vertically falling waterdrops
2	Protection against medium-sized foreign objects	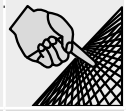	Protection against contact with the fingers / Protection against solid foreign objects Ø ≥ 12.5 mm	2	Protection against angular dripping water (from angles)		Protection against waterdrops falling at an angle (any angle up to 15° of the vertical)
3	Protection against small foreign objects	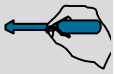	Protection against contact with tools / Protection against solid foreign objects Ø ≥ 2.5 mm	3	Protection against spray water	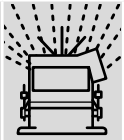	Protection against spray water (any angle up to 60° of the vertical)
4	Protection against granular foreign objects		Protection against contact with a wire / Protection against solid foreign objects Ø ≥ 1.0 mm	4	Protection against splashing water	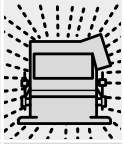	Protection against splashing water from any direction
5	Dustproof		Protection against contact with a wire / Protection against uncontrolled ingress of dust	5	Protection against water jet		Protection against water jet from any direction
6	Dustproof		Protection against contact with a wire / Complete protection against ingress of dust	6	Protection against powerful water jet		Protection against powerful water jet from all directions
				7	Protection against the effects of temporary immersion in water		Protection against ingress of water negatively impacting the proper function by temporary submersion into water
				8	Protection against the effects of continuous immersion in water	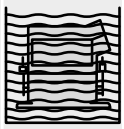	Protection against ingress of quantities of water negatively impacting the proper function by continuous submersion into water
				9	Protection against high pressure water jet featuring high temperatures	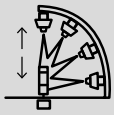	Protection against water from all directions characterized by high pressure and high temperatures

AUTOCLAVING OF ODU MEDI-SNAP®

The ODU MEDI-SNAP® connectors are also available for the following sterilization processes: Steam sterilization with pre-vacuum or gravitation process. The connectors are tested with autoclave equipment in accordance with DIN EN 13060:2019-02 at 134 °C.

For other sterilization processes like Sterrad / ETO and Gamma, please contact us. For autoclavable system solutions, we recommend our silicone overmolded cable assemblies.

Silicone overmolding
and free samples on request, please contact **sales@odu.de**

Sterilization curve

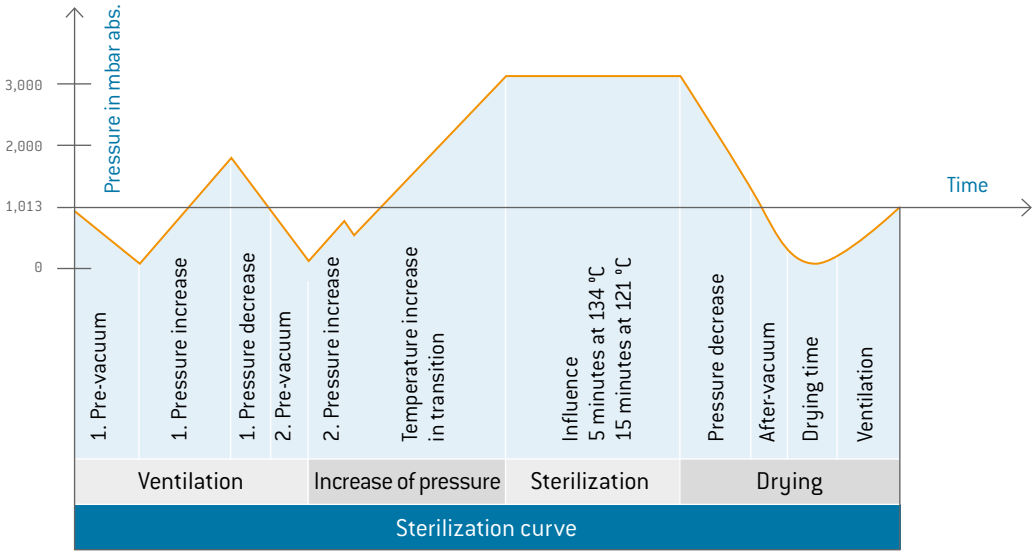

Size	Autoclaving	
	Push-pull plug	Break-away plug
	PEI	PSU
1	200	500
2		200
3.5 [1]		—

For information about autoclaving of receptacles, please contact us.

[1] Max. 2000 mating cycles if autoclaving is required.

Please also find further autoclavable solutions with our ODU MINI-SNAP® Series L/K/B and ODU AMC® High-Density matt chromium series of connectors.

TECHNICAL TERMS

AMBIENT TEMPERATURE

Temperature of the air or other medium in which a connector or a corresponding cable assembly is intended to be used.

AUTOCLAVABILITY

See page 121.

AWG

American Wire Gauge – see page 115.

BASE CURVE

See page 116.

CHEMICAL RESISTANCE

Chemical resistance is the ability of a material to protect itself against chemical attack or solvent reaction. In contrast to corrosion, there is no material removal, which is particularly typical for plastics and elastomers.
Adhesives, cleaning agents or other chemicals are often used on our products within the scope of general deployment and further handling. Contact with unsuitable chemicals may have an adverse effect on the mechanical and electrical properties of the insulation and housing materials. The connector specifications may no longer be sustainable. Please observe our handling suggestions and technical instructions as given in this catalog or corresponding assembly instructions.

CLEARANCE DISTANCE

The shortest distance by air between two conductive parts (according to IEC 60664-1:2020 (VDE 0110-1:2022-07)).

CODING (MECHANICAL)

Geometry detail that prevents interchangeability of otherwise identical connectors. This is useful when two or more identical connectors are attached to the same device.

CONNECTOR WITH BREAKING CAPACITY (CBC)

Connector that may be mated or unmated during intended use, live or under load (according to IEC 61984:2008 (VDE 0627:2009-11)).

CONNECTOR WITHOUT BREAKING CAPACITY (COC)

Connector which is not deemed to be engagend or disengaged in normal use when live under load (according to IEC 61984:2008 (VDE 0627:2009-11)).

CONNECTORS

An element which enables electrical conductors to be connected and is intended to create and/or separate connections with a suitable counterpart (according to IEC 61984:2008 (VDE 0627:2009-11)). If not otherwise specified, these are connectors without breaking capacity (COC).

CONTACT RESISTANCE

Total resistance value measured from terminal to terminal. In this case, the resistance is significantly lower than the contact resistance. The specifications are average values.

CORES

Electrical conductor, solid wire or multi-wire strand, with insulation as well as any conductive layers. Cables or leads may have one or more cores.

CREEPAGE DISTANCE

The shortest distance between two conductive parts along the surface of a solid insulation material IEC 60664-1:2020 (VDE 0110-1:2022-07). This factors in all elevations and recesses in the insulator, as long as defined minimum dimensions are on hand.

CRIMP BARREL

A terminal sleeve which can accommodate one or more conductors and be crimped by a crimping tool.

CRIMP CONNECTION (CRIMP TERMINATION)

The permanent, non-detachable and solder-free mounting of a contact to a conductor via deforming or shaping under pressure to make a good electrical and mechanical connection. Executed with crimping tool, press or automatic crimping machine (see page 104 ff).

CRIMPING AREA

The specified area of the crimp barrel in which the crimp termination is executed by means of deforming or shaping the barrel under pressure around the conductor.

DELIVERY FORM

Connectors can be delivered in assembled form or as individual parts.

DERATING CURVE

The corrected current-carrying capacity curve, derived from the determined base curve (0.8 × measured current). It factors in

TECHNICAL TERMS

manufacturing tolerances as well as uncertainties in temperature measurement and measurement arrangement, See derating measurement method.

DERATING MEASUREMENT METHOD IN ACCORDANCE WITH IEC 60512-5-2:2002 (DIN EN 60512-5-2:2003-01)

See page 116.

INSERTION AND WITHDRAWAL FORCE

The force required to fully insert or withdraw pluggable elements without the influence of a coupling or locking device.

INSULATOR

Part of a connector that separates conductive parts with different potential, usually identical to the contact carrier

MATING CYCLES

A mating cycle consists of one insertion and withdrawal action of both connector parts with each other. The given values are only valid under the following conditions: clean environment, adequate radial alignment, flawless counter contact pins.

MAX. CONTINUOUS CURRENT

The metrologically determined amperage at room temperature (approx. 20° C) which increases the contact temperature to the limit temperature. The values specified in the catalog apply to either individual contacts or completely assembled inserts / modules, as indicated. Refer to page 116 for the derating curve, if a different ambient temperature is valid

NOMINAL CURRENT

see Rated Current

NOMINAL SINGLE CONTACT CURRENT LOAD

The current-carrying capacity which each individual contact can be loaded with on its own (see page 116)

NOMINAL VOLTAGE

The nominal voltage of the power source for which the connector is being used. The nominal voltage may not be higher than the rated voltage of the connector.

OPERATING TEMPERATURE

Permissable temperature range between the uppermost and lowermost limits. This includes contact heating through current-carrying capacity.

OPERATING VOLTAGE

The operating voltage is the voltage supply at the device. The operating voltage may not be higher than the rated voltage of the connector.

OVERVOLTAGE CATEGORY

Numeral defining a transient overvoltage condition as defined in Table F.1 in IEC 60664-1:2020 (VDE 0110-1:2022-07)). This table provides the value of the rated impulse voltage that must be met.

PCB TERMINATION

A conductive connection between the PCB and an element in through-hole assembly, THT (through-hole technology).

POLLUTION DEGREE 1

No or only dry, non-conductive pollution is present. The pollution has no influence. For example, this is common for computer systems and measuring instruments in clean, dry, or air-conditioned rooms.

POLLUTION DEGREE 2

(= standard, if no specific pollution degree is indicated)

Only non-conductive pollution is present. However, temporary conductivity due to condensation must be anticipated. For example, this is common for devices in laboratories, residential, sales, and other business areas.

POLLUTION DEGREE 3

Conductive pollution is present or dry, non-conductive pollution that will become conductive because condensation is expected. For example, this is common for devices in industrial, commercial, and agricultural operations, unheated storage areas, and workshops.

PRINTED CIRCUIT BOARD (PCB)

A PCB is a carrier for electronic components. It serves the purposes of mechanical mounting and electrical connection.

RATED IMPULSE VOLTAGE

The specified rated impulse voltage confirms the dielectric withstand voltage and thereby the withstand capability of its insulation against transient overvoltages according to the standard by applying the test voltage according to Table F.6 in IEC 60664-1:2020 (VDE 0110-1:2022-07)) over a defined time range.

TECHNICAL TERMS

RATED CURRENT (NOMINAL CURRENT)

See page 116.

RATED VOLTAGE

The rated voltage which the manufacturer specifies for a connector and which the operating and performance features relate to.

REDUCTION FACTOR

Based on VDE 0298-4:2013-06, connectors and cables with more than 5 contacts have a higher heating rate compared to individual contacts. For this reason, the aforementioned standard is calculated with a reduction.

SOLDER CONNECTION (SOLDER TERMINATION)

Termination technology in which a molten additional metal (solder) with a lower melting point than the base materials to be connected is used to attach two metallic materials to one another.

STRANDED WIRE

The stranded wire is an electrical conductor consisting of thin individual wires and is therefore easy to bend.

SURGE VOLTAGE

The generic term for high impulse test voltages used to test power supply equipment.

TERMINATION CROSS-SECTION

The specified cross-sections correspond to a a “fine-wire” conductor structure (7/19 wire) according to AWG (ASTM B258-14) or to a “fine-wire” conductor structure pursuant to IEC 60228:2004 (VDE 0295:2005-09; Class 5), borderline conductor structures require a separate review.

TERMINATION TECHNOLOGIES

Methods for connecting the leads to the electro-mechanical element, such as solder-free connections pursuant to IEC 60352 (DIN EN 60352): crimp, screw connection etc. or soldering connection (see page 114).

TEST VOLTAGE

The test voltage which a connector or a corresponding cable assembly can withstand under defined conditions without dielectric breakdown or flashover.

TIGHTNESS IEC 60529:1989 (VDE 0470-1:2014-09)

See protection types on page 120.

TOTAL RESISTANCE

Total resistance value measured from terminal to terminal (e.g. without crimp resistance).
The specifications are average values.

WIRE

Solid conductor

WORKING VOLTAGE

According to IEC 60664-1:2007 (VDE 0110-1:2008-01) standard „Highest r.m.s. value of the a.c. or d.c. voltage across any particular insulation which can occur when the equipment is supplied at rated voltage.“

GENERAL NOTE

The connectors and cable assemblies listed in this catalog are generally designed as connectors without breaking capacity unless otherwise stated. The rated voltage specification given on the respective data sheet must be respected. Suitable precautionary measures must be taken to ensure that people do not come into contact with live conductors during installation and operation. All entries in this catalog were thoroughly reviewed before printing. ODU reserves the right to make changes based on the current status of knowledge without prior notice and without being obliged to provide replacement deliveries or refinements of older designs.

All dimensions are in mm.
Some figures are for illustrative purposes only. Subject to change without notice. Errors and omissions excepted. We reserve the right to change our products and their technical specifications at any time in the interest of technical improvement. This publication supersedes all prior publications.

ODU MEDI-SNAP® / C / 0523 / EN

carbon neutral
print production
natureOffice.com | DE-077-860878

Printed on certified
recycled paper.

This publication is also available as a PDF file that can be downloaded from www.odu-connectors.com