THIS DRAWING IS UNPUBLISHED. RELEASED FOR PUBLICATION 20
© COPYRIGHT 20 BY - ALL RIGHTS RESERVED.

PROJECT NO.: 89-52119

REVISIONS

P	LTR	DESCRIPTION	DATE	DWN	APVD
	P	REVISED PER ECO-11-005150	21MAR2011	RK	HMR
	P1	ECR-15-009166	14NOV2016	ML	VC

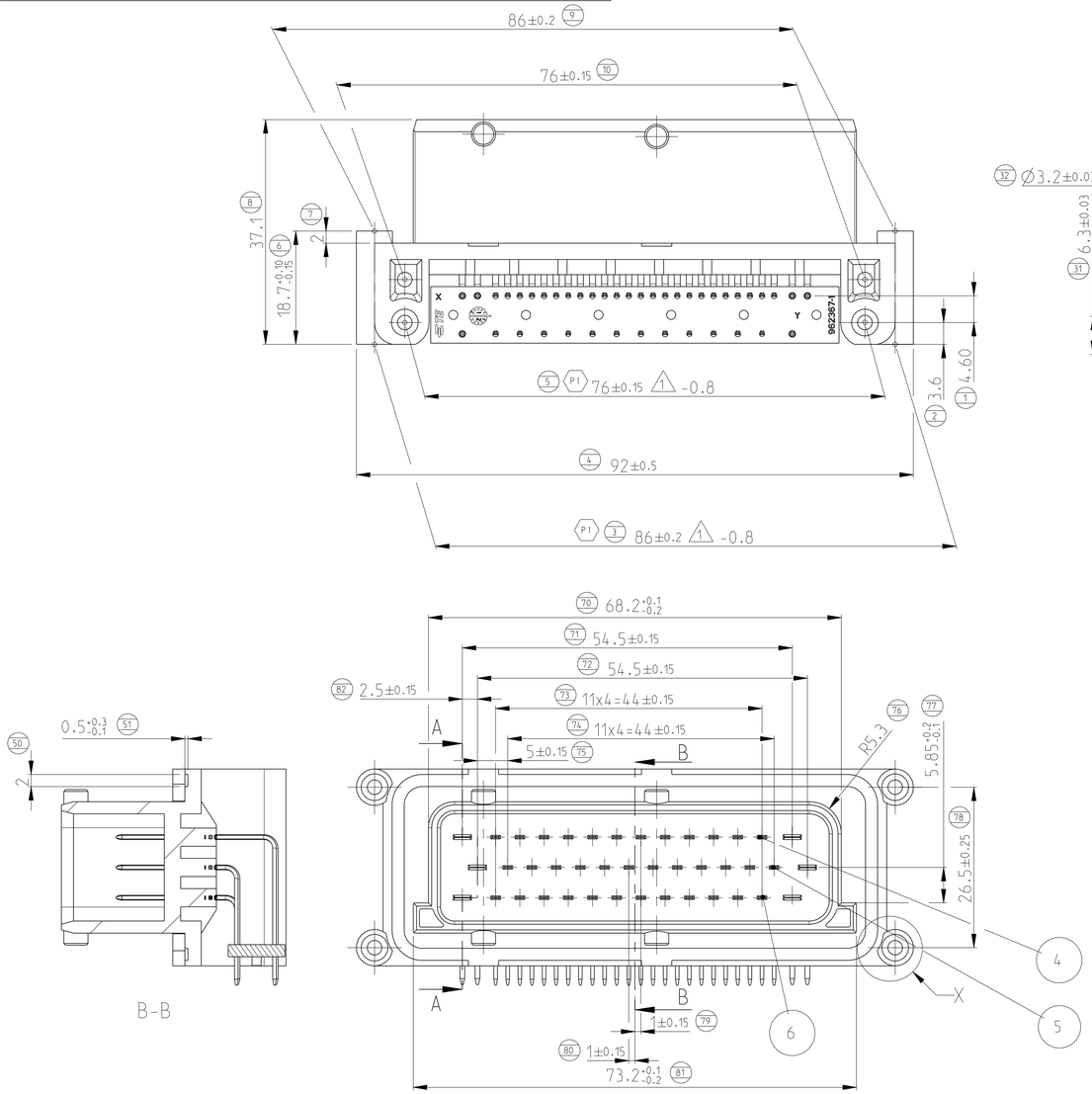

PCB-Layout für 90° + 270° Version
2:1

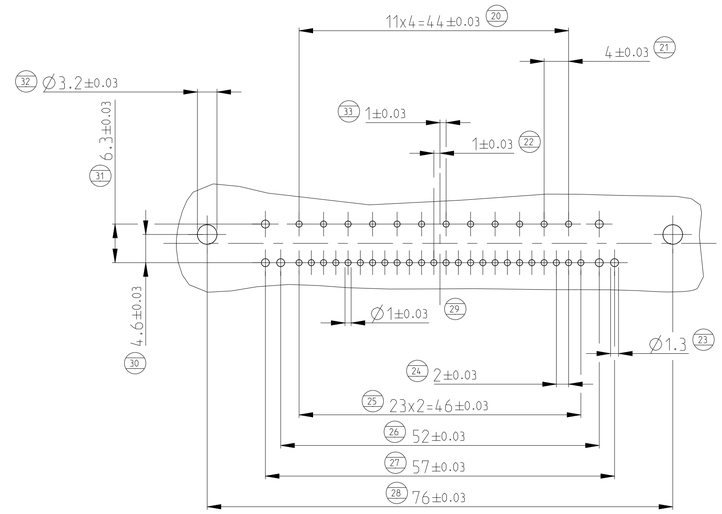

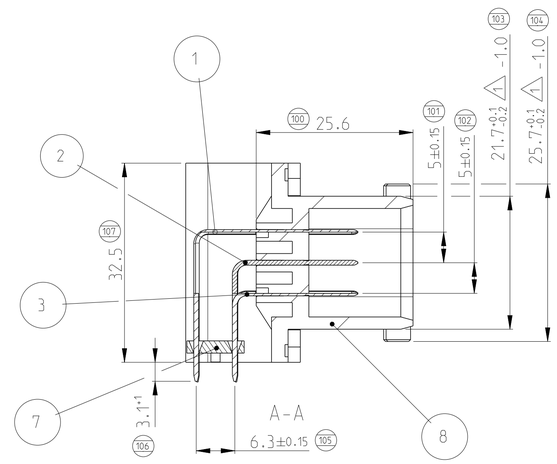

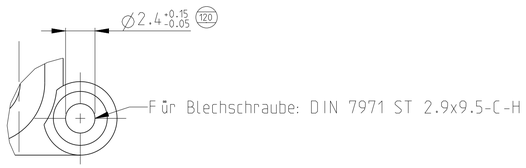

X
4:1

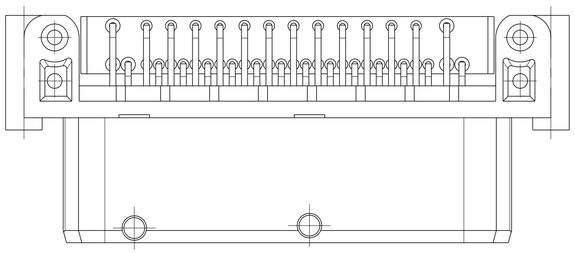

1 WARPAGE: ADDITIONAL TO PERMISSIBLE DIMENSION TOLERANCE SEE VALUE BEHIND NOTE
Einfall: Zusaetzlich zur Maßtoleranz zulaessiger gleichmaeßiger Einfall siehe Wert hinter Note

ORDER Nr.	REV.	POS.	ITEM Nr.	DESCRIPTION	MATERIAL	SURFACE / COLOR
5-963224-1 Coding N	E	8	1	42pos Mixed Tab Header	PBT 30% GV	white
		7	1	Centering Plate	PBT 30% GV	black
		6	12	1.6 Tab (33.5)	CuSn4 F41	pre-tinned
		5	12	1.6 Tab (38.5)	CuSn4 F41	pre-tinned
		4	12	1.6 Tab (49.8)	CuSn4 F41	pre-tinned
		3	2	2.8 Tab (33.5)	CuSn4 F41	pre-tinned
		2	2	2.8 Tab (38.5)	CuSn4 F41	pre-tinned
		1	2	2.8 Tab (49.8)	CuSn4 F41	pre-tinned
4-963224-1 Coding D1	E	8	1	42pos Mixed Tab Header	PBT 30% GV	brown
		7	1	Centering Plate	PBT 30% GV	black
		6	12	1.6 Tab (33.5)	CuSn4 F41	pre-tinned
		5	12	1.6 Tab (38.5)	CuSn4 F41	pre-tinned
		4	12	1.6 Tab (49.8)	CuSn4 F41	pre-tinned
		3	2	2.8 Tab (33.5)	CuSn4 F41	pre-tinned
		2	2	2.8 Tab (38.5)	CuSn4 F41	pre-tinned
		1	2	2.8 Tab (49.8)	CuSn4 F41	pre-tinned
3-963224-1 Coding C1	E	8	1	42pos Mixed Tab Header	PBT 30% GV	blue
		7	1	Centering Plate	PBT 30% GV	black
		6	12	1.6 Tab (33.5)	CuSn4 F41	pre-tinned
		5	12	1.6 Tab (38.5)	CuSn4 F41	pre-tinned
		4	12	1.6 Tab (49.8)	CuSn4 F41	pre-tinned
		3	2	2.8 Tab (33.5)	CuSn4 F41	pre-tinned
		2	2	2.8 Tab (38.5)	CuSn4 F41	pre-tinned
		1	2	2.8 Tab (49.8)	CuSn4 F41	pre-tinned
2-963224-1 Coding B1	E	8	1	42pos Mixed Tab Header	PBT 30% GV	grey
		7	1	Centering Plate	PBT 30% GV	black
		6	12	1.6 Tab (33.5)	CuSn4 F41	pre-tinned
		5	12	1.6 Tab (38.5)	CuSn4 F41	pre-tinned
		4	12	1.6 Tab (49.8)	CuSn4 F41	pre-tinned
		3	2	2.8 Tab (33.5)	CuSn4 F41	pre-tinned
		2	2	2.8 Tab (38.5)	CuSn4 F41	pre-tinned
		1	2	2.8 Tab (49.8)	CuSn4 F41	pre-tinned
1-963224-1 Coding A1	E	8	1	42pos Mixed Tab Header	PBT 30% GV	black
		7	1	Centering Plate	PBT 30% GV	black
		6	12	1.6 Tab (33.5)	CuSn4 F41	pre-tinned
		5	12	1.6 Tab (38.5)	CuSn4 F41	pre-tinned
		4	12	1.6 Tab (49.8)	CuSn4 F41	pre-tinned
		3	2	2.8 Tab (33.5)	CuSn4 F41	pre-tinned
		2	2	2.8 Tab (38.5)	CuSn4 F41	pre-tinned
		1	2	2.8 Tab (49.8)	CuSn4 F41	pre-tinned

THIS DRAWING IS A CONTROLLED DOCUMENT.
DIMENSIONING AND TOLERANCING PER GPS (ISO STANDARDS).

DIMENSIONS: mm

TOLERANCES UNLESS OTHERWISE SPECIFIED:
0 PLC ±0.2
1 PLC ±0.2
2 PLC ±0.2
3 PLC ±
4 PLC ±
ANGLES ±5

MATERIAL: TBD
FINISH: -

DWN 03JUL2007 L. Gerber
CHK 16JUL2007 T. Kilian
APVD -
PRODUCT SPEC -
APPLICATION SPEC -
WEIGHT 44.3

TE Connectivity

NAME: Mix Messerleiste, 42 polig

SIZE A1 | CAGE CODE - | DRAWING NO C-963224 | RESTRICTED TO -

CUSTOMER DRAWING | SCALE 2:1 | SHEET 1 OF 1 | REV P1

4805 (3/13)