MODEL NO.	PACKAGING
134-1000-004	ONE PCS PER BAG

REV	ECO	DATE
001	ECO-17-0032	11/28/2017
002	ECO-18-0020	08/21/2018

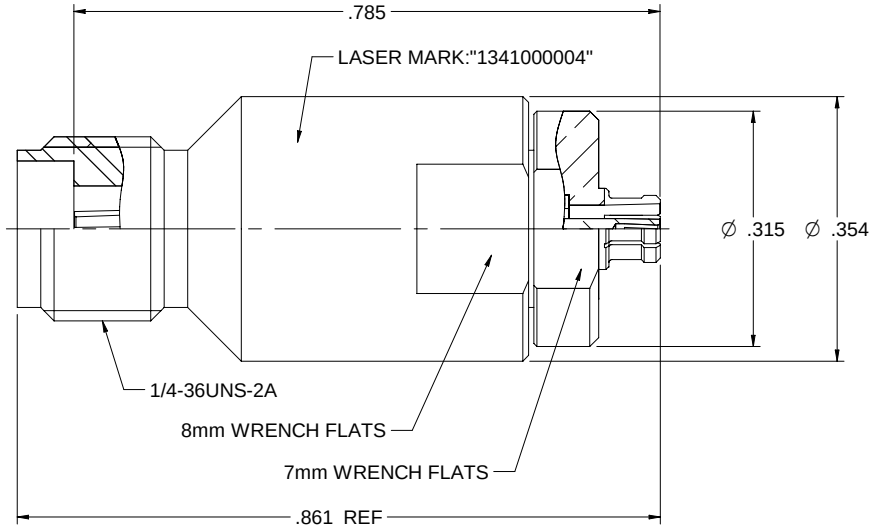

NOTES: UNLESS OTHERWISE SPECIFIED

1. MATERIAL & FINISH:
   1.1 BODY: PASSIVATED STAINLESS STEEL
   1.2 CONTACT PIN& CONTACT BODY: GOLD PLATED BERYLLIUM COPPER
   1.3 INSULATOR1: ULTEM1000 AMBER
   1.4 INSULATOR2: PTFE WHITE

2. ELECTRICAL:
   2.1 IMPEDANCE: 50 OHMS
   2.2 FREQUENCY RANGE: DC-40 GHz
   2.3 VOLTAGE STANDING WAVE RATIO: 1.3MAX
   2.4 DIELECTRIC WITHSTANDING VOLTAGE: 325 VRMS MIN
   2.5 CONTACT RESISTANCE:
      2.5.1 CENTER CONTACT: 6 MILLIOHM MAX
      2.5.2 OUTER CONTACT: 2 MILLIOHM MAX
   2.6 INSULATOR RESISTANCE: 5000 MEGOHM MIN

3. MECHANICAL:
   3.1 ENGAGEMENT FORCE: 0.23 NM MAX (2.92MM)
      FULL DETENT 19 N MAX; SMOOTH BORE: 11 N MAX (SMPM)
   3.2 DISENGAGEMENT FORCE: 0.23 NM MAX (2.92MM)
      FULL DETENT 29 N MAX; SMOOTH BORE: 11 N MAX (SMPM)
   3.3 CONTACT RETENTION: 22 N MIN
   3.4 DURABILITY: 500 CYCLES MIN (2.92MM)
      FULL DETENT 100 CYCLES MIN, SMOOTH BORE: 500 CYCLES MIN (SMPM)

4. ENVIRONMENT:
   4.1 THERMAL SHOCK: MIL-STD-202, METHOD 107, CONDITION B.
   4.2 OPERATING TEMPERATURE: -65 TO 165°C
   4.3 SHOCK: MIL-STD-202, METHOD 213, CONDITION I
   4.4 VIBRATION: MIL-STD-202, METHOD 204, CONDITION D
   4.5 MOISTURE RESISTANCE: MIL-STD-202, METHOD 106

cinch	Model No. 134-1000-004	Johnson
	RoHS2 ☑ 2011/65/EU	Title: ADAPTER ASSEMBLY,2.92mm(SMK) JACK TO SMPM JACK
	Cage Code	
	3RD ANGLE PROJECTION	Drawing No. 134-1000-004 Rev. 002
	UNLESS OTHERWISE SPECIFIED DIMS INCH	
	.XXX ±.02 .XXXX ±.01 ANGLES ±5°	Drawn By: Betty.Yu
	Date: 08/21/2018	Size C DO NOT SCALE DRAWING Workmanship Std. NONE Sheet 1 of 1

THIS PROPRIETARY Document is property of Cinch Connectivity Solutions. Unauthorized use, reproduction and disclosure is prohibited. By understanding that it is not to be reproduced or shared with other parties without written consent.
INTERPRETATION OF DRAWING IS ACCORDANCE WITH THE ASME Y14.5-2009.